Corte Perfil Corredera 70 mm Alumsur

SLIDING FRAME PROFILE

7470 EU-B 1.442 kg/m

Box Reinforcement steel DS01079-K 30x25	Thickness	Weight-kg/m
	1.25mm	1.013
	1.50mm	1.200
	2.00mm	1.559

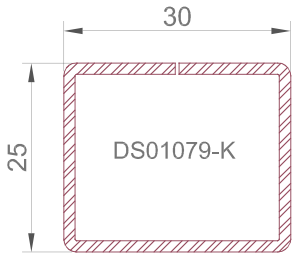

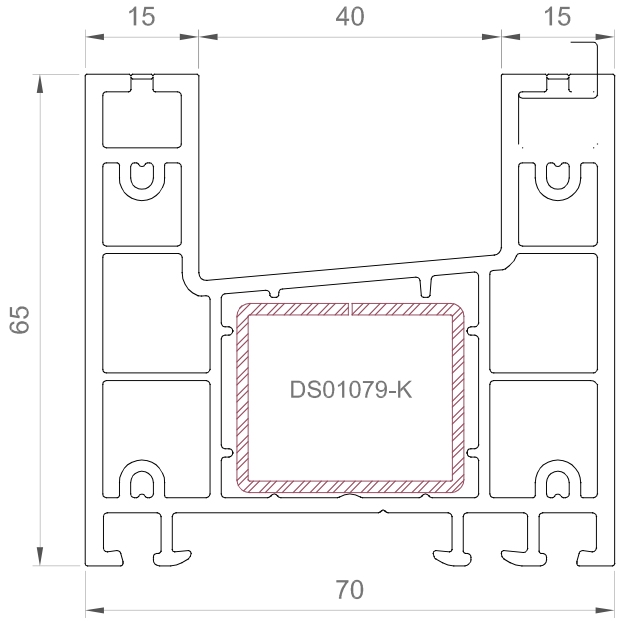

SLIDING SASH PROFILE

7471 EU-B 1.352 kg/m

U-Reinforcement steel DS01080 24.5X36	Thickness	Weight-kg/m
	1.25mm	0.919
	1.50mm	1.098
	2.00mm	1.440
Box Reinforcement steel DS01081-K 19.5X23	1.25mm	0.768
	1.50mm	0.905
	2.00mm	1.166

