MANUAL ANTIJAMMER 2019

USE AND INSTALLATION MANUAL

FUNCTIONING:

The system works automatically for both locking and unlocking.

Jammer Device Working Process:

1.power on the whole system;

2.Jammer device signal red light keeps on when there is constant signal interference;

3.After 30 seconds,jammer device blue light starts slow blinking if jammer signal continues,blue light slow blinking action will last 90 seconds;

4.After total 120 seconds,jammer device blue light will be keeping on,killer start relay will start working,and then cut car fuel pump supply,if jammer signal is always there,whole cut oil process will proceed total 5 times until engine will be cut finally at the 5th time.

5.But after 120 seconds,engine is cut status,jammer device will delay 60 seconds to detect signal again,engine immobilizer is reset if there is constant jammer signal after 60 seconds;

6.Within 60 seconds delaying checking duration,jammer signal is disappeared for several seconds and appear again for several seconds,60S delay time will restart from the beginning of new jammer signal happening;

7.When engine is immobilizer status,cut off the car power,reset power again,engine immobilizer status keeps the same status as before,if you want to get enable engine working,you need to wait 30 minutes.

LED:

Led off: indicates that there is no presence of jammer in the place, no jammer detected.

Led on: indicates that there is jammer in the place, presence of jammer detected.

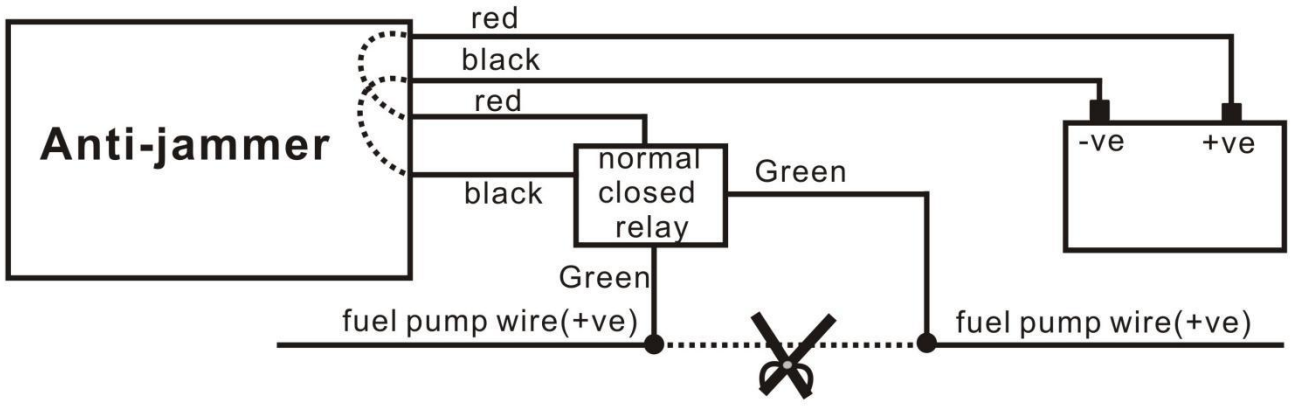

wire diagram(1)

Attention:

the relay that goes on the whip is 12 volts, therefore to be used in vehicles with 12v battery (cars, motorcycles, etc). If you are going to install the device on a truck that uses a 24v battery, you must cut the wires that leave the device and go to the relay, dispense the 12v relay and connect a 24v relay in place.

Optional KEY:

you can install a key in the vehicle, in a place where only the driver should have the knowledge. Cut off any of the black wires that connect the anti-jammer to the relay and install the key as shown in the following figure. The key must remain in the on (connected) position all the time, so that the vehicle will normally operate through the normally closed contacts of the ANTIJAMMER relay and there will be a lock when the stop never energizes the relay with the presence of a jammer in thelocal. However, if there is an unwanted cut, due to the presence of a non-ROBO jammer, such as those used in prisons, for example, turning the KEY counter-clockwise will de-energize the relay, thus unblocking the vehicle and will take it out of the unwanted blocking situation. When leaving the place with the unwanted jammer signal, return the key to the on position.

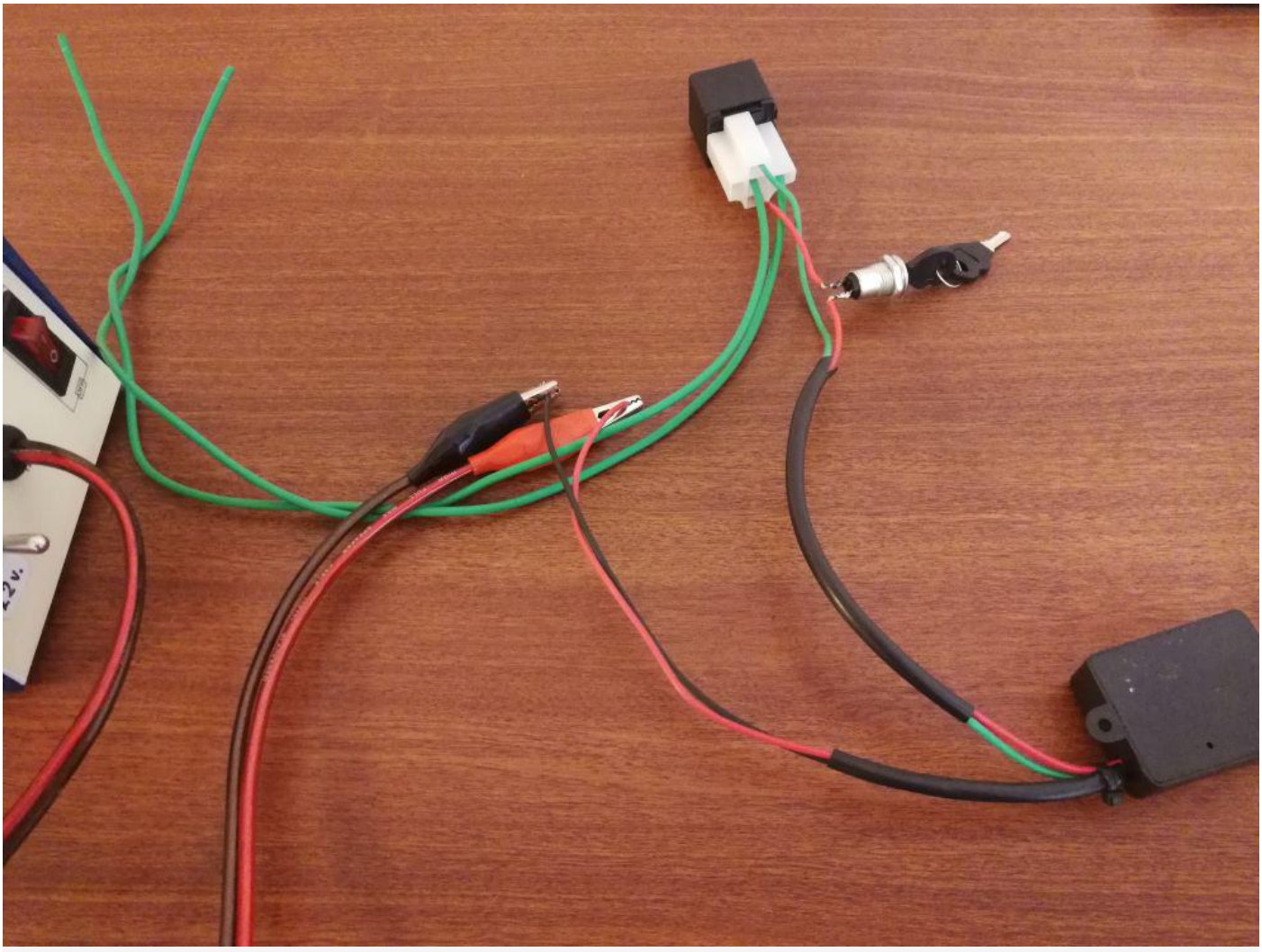

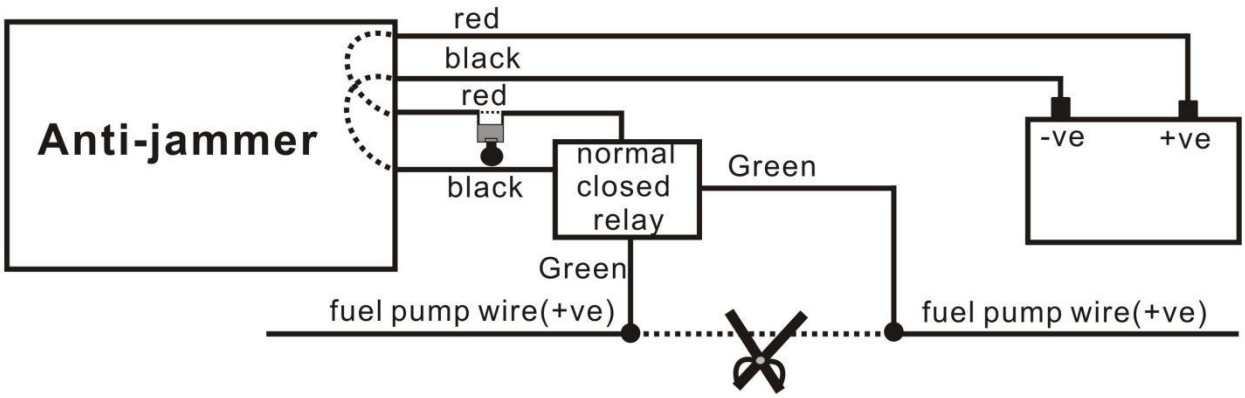

wire diagram(2)

NOTES

On the front of the device there is a small hole, which is the LED screen that remains inside the device welded on the plate.

Although there is transparent acetate closing the hole, if you are going to install the device on a motorcycle or jet ski, we advise you to seal the hole (LED visor) with insulating tape, avoiding the entry of water.

You can pass electrical tape around the whole device, it will be even more protected from water.

Do not open the device. If you do so, it will imply the loss of the guarantee.

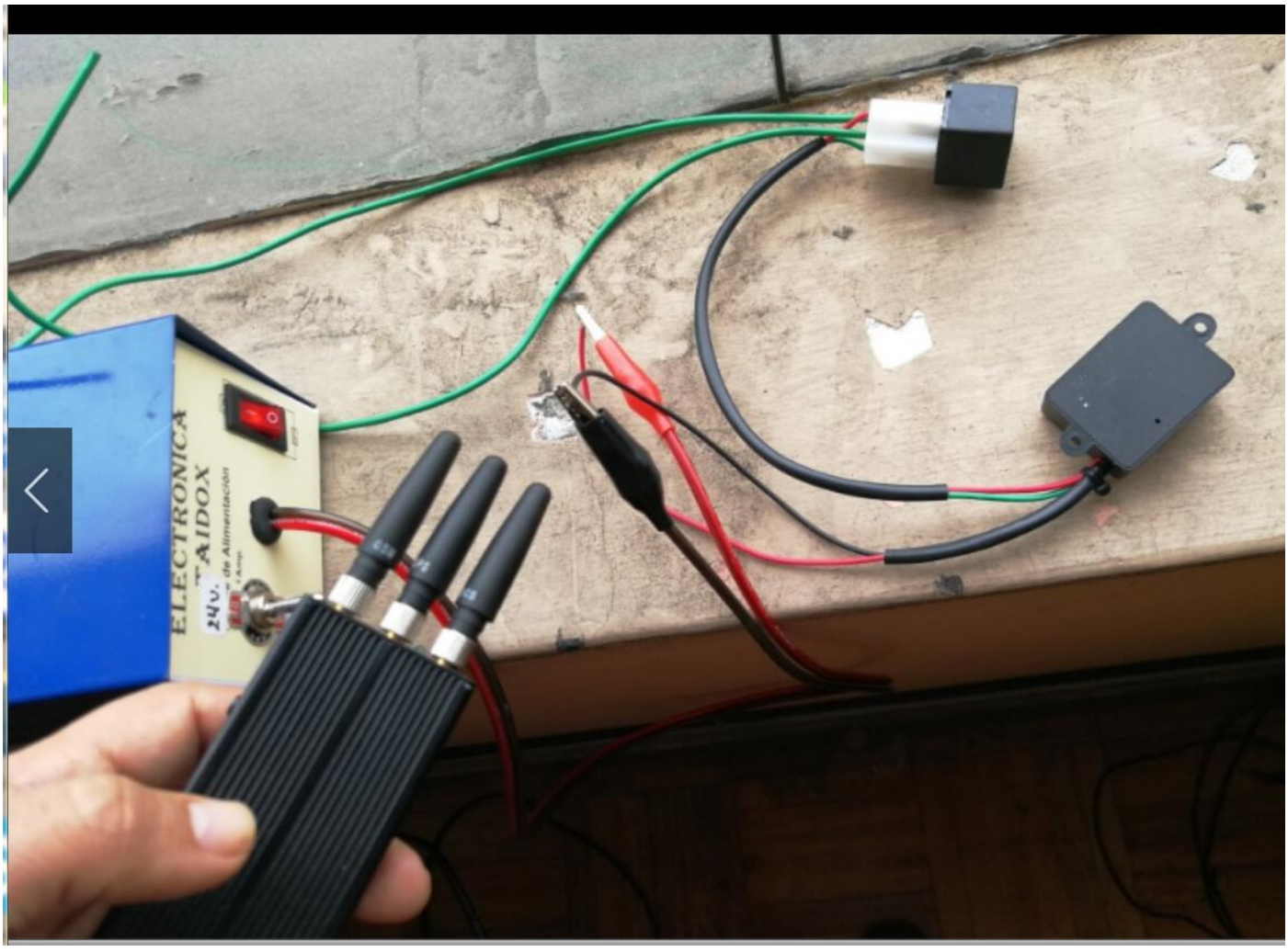

Special Instruction:

unlock the engine does it in 2 cases

1. - When the control box no longer detects the real or unreal jammer, wait 1 minute and unlock the motor AUTOMATIC mode (not gradual)

2. -when the engine is blocked, the electric power goes to the relay (example: the thief removes the battery from the vehicle) the relay is still active and blocking the motor when the electric power returns, the control box records the event and only unblocks in 20 minutes immediately (not gradual)

In summary:

the engine blockage is gradual, the engine unlocking is not gradual

the control box detects the JAMMER signal (real or unreal)

the box acts like this:

1. - After detecting it waits 120 seconds and blocks the motor, then it passes 4 seconds and unlocks the motor

2. -block motor and after 4 seconds unlock engine

3. -block motor and after 4 seconds unlock engine

4. - blocks engine and motor is blocked

when the control box does not detect jammer signal, it spends 60 seconds (1 minute) and unlocks the motor