Butterfly Valve

KE

Type Series Booklet

Legal information/Copyright

Type Series Booklet KE

All rights reserved. The contents provided herein must neither be distributed, copied, reproduced, edited or processed for any other purpose, nor otherwise transmitted, published or made available to a third party without the manufacturer's express written consent.

Subject to technical modification without prior notice.

© KSB S.A.S, Gennevilliers (Paris), France 2024-04-04

Contents

Butterfly Valves **4**
Centred-disc Butterfly Valves 4
KE 4
Main applications 4
Fluids handled 4
Operating data 4
Design details 4
Valve body materials 5
Product benefits 5
Product information 5
Certifications 6
Related documents 6
Purchase order specifications 6
Pressure/temperature ratings 7
Technical data 8
Materials 10
Variants 16
Dimensions and weights 18
Line connections 24
Installation information 25

Butterfly Valves

Centred-disc Butterfly Valves

KE

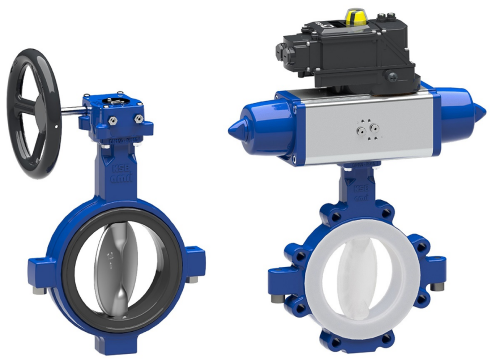

Main applications

- Chemical industry
- Seawater desalination/reverse osmosis
- Paper industry / pulp industry
- Pharmaceutical industry
- Swimming pools
- Process engineering
- Sugar industry
- Industrial recirculation systems
- Water treatment

Fluids handled

- Condensate
- Cleaning agents
- Distillate
- Abrasive fluids
- Aggressive fluids
- Fluids containing mineral oils
- Solids-laden fluids
- Corrosive fluids
- Explosive fluids
- Flammable fluids
- Inorganic fluids
- Fluids posing a health hazard
- Organic fluids
- Polymerising/crystallising fluids
- Toxic fluids
- Extremely aggressive fluids
- Volatile fluids
- Oil
- Brine
- Solvents
- Vacuum

Operating data

Table 1: Operating properties

Characteristic	Value	
	KE Plastomer	KE Elastomer
Nominal pressure	PN 10	PN 10
Nominal size	DN 40 - 600	DN 40 - 300
Max. permissible pressure [bar]	10	10
Min. permissible temperature [°C]*	≥ -20	≥ -20
Max. permissible temperature [°C]*	≤ +200	≤ +150
Actuation at ΔP [bar] at ambient temperature	10 max.	10 max.
Vacuum operation down to	10^{-5} bar absolute	0.3 bar absolute
Max. permissible flow velocity at operating pressure	5 m/s for clean liquids 50 m/s for clean gases	

* The temperature limits depend on the fluid handled and the liner elastomer's properties.

Design details

Design

- Two-piece body:
  - Wafer-type body with flat faces - T1: DN 40 - 300
  - Full-lug body with raised faces - T4: DN 40 - 300
  - U-section body - T6: DN 350 - 600
- Body types T4 and T6 suitable for downstream dismantling
- Body with polyurethane coating, thickness 80 µm, colour: RAL 5002, blue
- Earth connection option
- PFA liner, min. thickness: 2.5 mm in acc. with ISO 19240
- Shaft/valve disc joint:
  - Single-piece metal shaft/valve disc assembly
  - Shaft and actuating shaft made of stainless steel 17-4, pressed into the stainless steel valve disc
- Top flange and square valve shaft end to ISO 5211
- Shaft shoulder as shaft anti-blowout device (EN 12569 and EN 736-2)
- Valve body without separate bottom cover: DN 40 to 100 mm
- Flange faces to EN 1092 PN 10
- Design to EN 12569, EN 593 and ISO 10631
- Top flange and square valve shaft end to ISO 5211
- Marking in accordance with EN 19
- Absolutely tight shut-off (no leakage visible to the naked eye) in either flow direction in accordance with EN 12266-1, leakage rate A; ISO 5208, Category A; API 598 Table 5 and FCI 70-2 Cl. VI

0165.1/04-EN

- Standardised connections to EN 1092 PN 10 and PN 16, and to ASME B16.5 Class 150
- Face-to-face length to ISO 5752-20, EN 558-1-20 and API 609, Table 1
- The PED requirement also applies to unstable gases on request.

Variants

- Quarter-turn levers of the S+ / SR+ / SP+ / CR+ / CM+ type series
- MS / MC manual gearboxes
- Electric quarter-turn actuators
- Electric multi-turn actuators
- ACTAIR EVO / DYNACTAIR EVO pneumatic actuators
- HQ EVO hydraulic actuators
- AMTROBOX for open/closed position signalling
- AMTRONIC U on/off control unit
- SMARTRONIC U positioner
- Anti-static design for manually actuated valves

Valve body materials

Table 2: Overview of available materials

Material	Material number	Type	DN	KSB code
EN-GJS-400-18U-LT (EN-JS1049)	JS 1049	T1 T4	DN 40-300	3l
EN-GJS-400-15 (EN-JS1030)	JS 1030	T6	DN 350-600	3g

Product benefits

- Primary seal at the shaft passages:
  - Ensured by the contact pressure between the valve disc with spherical sealing contour and the elastomer or PFA liner
  - The compression of the liner's collar between the shaft and the body ensures absolutely tight sealing.
- Back-up seal at the shaft passage in accordance with EN 12569:
  - Ensured by pressing the liner's collar and the backing ring against the shaft
  - This pressure is applied by means of a spring washer.
  - This back-up seal is not active in normal operation. It is completely independent of the primary seal at the shaft passage.
- Tight sealing at the flanged line connections:
  - Ensured by the compression of the liner between the body and the piping flange
  - An additional elastomer joint ring ensures reliable and long-term sealing at the flanges, even during vacuum service.
- Tight shut-off:
  - Ensured by the contact between the valve disc with rounded sealing contour and the liner which protects the body.
  - The contact pressure is developed by the elastomer backing ring.
- Anti-static design/ATEX-compliant version available and compatible for use in ATEX zone II 2 GD, although the plastomer used has a specific electrical resistance of more than 10^9 Ohm.
- Optional: FKM backing ring for use in chlorine
- Extended neck allows insulation
- The weakest point of the shaft is located outside the valve body to ensure the valve's integrity (EN 12569).

Product information

Product information as per Regulation No. 1907/2006 (REACH)

For information as per European chemicals regulation (EC) No. 1907/2006 (REACH) see https://www.ksb.com/en-global/company/corporate-responsibility/reach.

Product information as per European Pressure Equipment Directive 2014/68/EU (PED)

The valves satisfy the safety requirements of Annex I of the European Pressure Equipment Directive 2014/68/EU (PED) for fluids in Groups 1 and 2.

Product information as per UK Pressure Equipment (Safety) Regulations 2016

The valves satisfy the safety requirements of the UK Pressure Equipment (Safety) Regulations 2016 (PER) for fluids in Groups 1 and 2.

EC Machinery Directive 2006/42/EC

Valves with actuators can meet the requirements of the 2006/42/EC Machinery Directive for partly completed machinery.

2002 German Technical Guidelines on Air Quality Control (TA Luft)

In compliance with the 2002 German Technical Guidelines on Air Quality Control (TA Luft)

Product information as per Directive 2014/34/EU (ATEX)

The valves do not have a potential internal source of ignition and can be used in potentially explosive atmospheres, Group II, category 2 (zones 1+21) to ATEX 2014/34/EU.

Certifications

Table 3: Overview

Label	Effective in:	Comment
	Worldwide	-
	Worldwide	Approved for marine applications
	Worldwide	Elastomeric parts meet FDA standards.
	Europe	Certificate regarding food contact materials as per European Regulation (EC) No. 1935/2004

Related documents

Table 4: Information/documents

Document	Reference number
Operating manual	8455.8

Purchase order specifications

1. Type
2. Nominal pressure
3. Nominal size
4. Fluid handled
5. Flow rate / flow velocity
6. Operating temperature
7. Materials (body, valve disc, seat)
8. Line connection, flange facing and flange surface quality
9. Actuator / automation
10. Reference number

Pressure/temperature ratings

Table 5: Pressure/temperature ratings for test and operating pressures [bar]

Pressure class	Shell test	Leak test (seat)
PN	**P10, P11**	**P12, leakage rate A**
10	15[1)]	11[2)3)]
		5.5[4)]

Table 6: Pressure/temperature curve (for KE Plastomer)

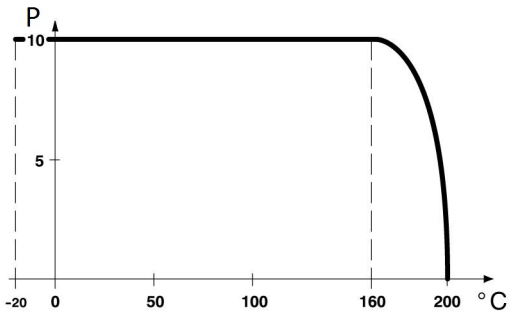

Silicone backing ring

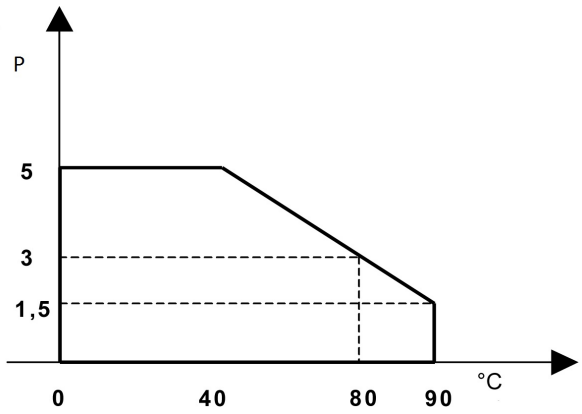

FKM backing ring

P: pressure in bar(g)

°C: Temperature

0165.1/04-EN

1 EN 12266-1 (P10, P11)
2 KE Elastomer: EN 12266-1 (P12, leakage rate A) / ISO 5208 Cat. A, API 598 Table 5, FCI 700-2 Cl. VI
3 KE Plastomer: EN 12266-1 (P12, leakage rate A)
4 KE Plastomer only: FKM backing ring

Technical data

Hydraulic characteristics

Table 7: Table [Kvo in m^3/ h / $bar^{0.5}$]
[Cvo in GUS / mn / psi $^{0.5}$]

DN	NPS	Version with single-piece shaft/valve disc assembly, PFA-encapsulated			Version with metal valve disc		
		Flow coefficient with valve disc fully open			Flow coefficient with valve disc fully open		
	[inch]	Kvo	Cvo	Zeta	Kvo	Cvo	Zeta
40	1½	60	87	1,14	60	39	1,14
50	2	130	186	0,59	170	104	0,35
65	2½	210	302	0,65	250	174	0,46
80	3	410	510	0,39	350	255	0,53
100	4	690	789	0,34	600	626	0,44
125	5	1290	1508	0,23	1180	1114	0,28
150	6	1990	2784	0,20	2300	2204	0,15
200	8	3510	5800	0,21	3680	4176	0,19
250	10	6180	7540	0,16	6800	7192	0,14
300	12	8640	10672	0,17	9190	10440	0,15
350	14	16920	21344	0,08	14630	11066	0,11
400	16	27570	26912	0,05	22620	12644	0,08
450	18	32130	34104	0,06	25120	20532	0,10
500	20	44870	41760	0,05	30110	21692	0,11
600	24	44120	60436	0,11	31210	29000	0,21

0165.1/04-EN

Actuating torque

A safety coefficient has already been included in the actuating torques for actuator selection.

Table 8: Table: actuating torques [Nm]

DN	NPS	Max. permissible actuating torque		
	[inch]	For KE Elastomer and KE Plastomer	KE Elastomer	
			Version with single-piece shaft/valve disc assembly, PFA-encapsulated	Version with metal valve disc
40	1½	14	72	110
50	2	22	98	150
65	2½	25	109	167
80	3	40	131	200
100	4	50	131	200
125	5	65	282	430
150	6	100	282	430
200	8	200	604	920
250	10	270	772	1100
300	12	380	1083	1650
350	14	500	-	-
400	16	700	-	-
450	18	900	-	-
500	20	1100	-	-
600	24	2000	-	-

Materials

Materials of KE Plastomer

Version with single-piece shaft/valve disc assembly, PFA-encapsulated

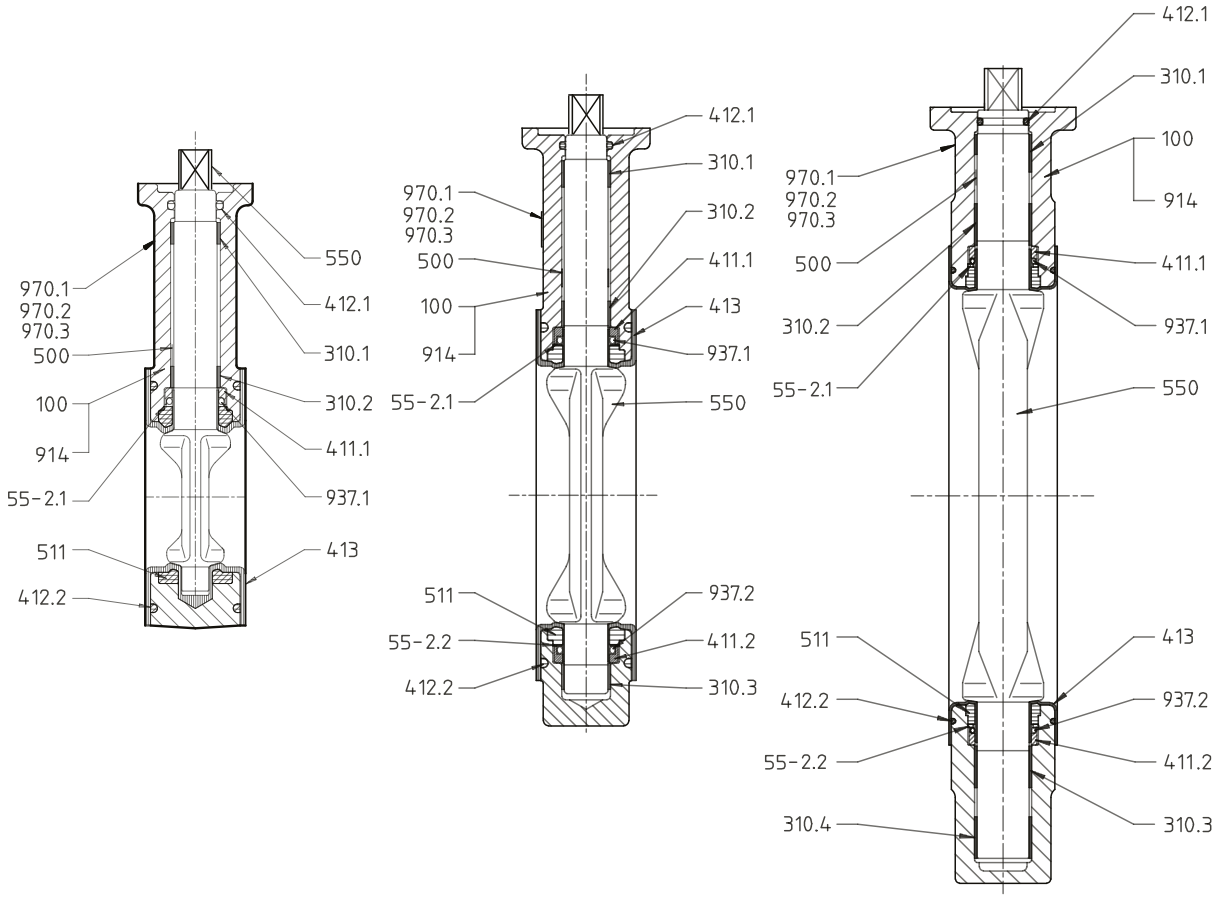

1.1) DN 40 - 100
for wafer-type body T1
and full-lug body T4

1.2) DN 125 - 300
for U-section body - T6

1.2) DN 350 - 600

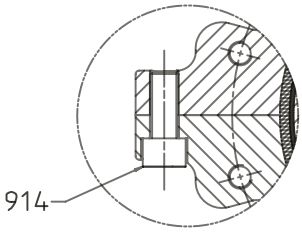

Detail: joining of body sections

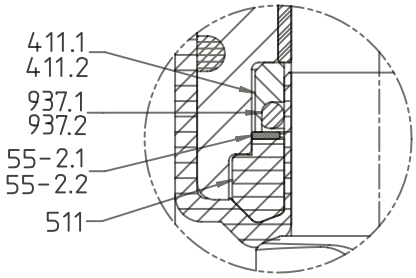

Detail: back-up seal

Fig. 1: Sectional drawings of KE Plastomer with single-piece shaft/valve disc assembly, PFA-encapsulated, DN 40 - 600

1.1	Back-up seal at upper shaft section: part Nos. 411.1, 937.1 and 55-2.1
1.2	Back-up seal at upper and lower shaft sections: part Nos. 411.1, 411.2, 937.1, 937.2, 55-2.1 and 55-2.2

0165.1/04-EN

Table 9: List of components

Part No.	Description	DN	Materials	KSB code
100	Upper and lower body section, T1 and T4	40 - 300	Nodular cast iron EN-GJS-400-18U-LT (JS 1049)	3l
100	Upper and lower body section, T6	350 - 600	Nodular cast iron EN-GJS-400-15 (JS 1030)	3g
310.1	Plain bearing	40 - 600	Steel with reinforced PTFE coating	-
310.2	Plain bearing	40 - 600	Steel with reinforced PTFE coating	-
310.3	Plain bearing	125 - 600	Steel with reinforced PTFE coating	-
310.4	Plain bearing	350 - 600	Steel with reinforced PTFE coating	-
411.1	Joint ring	40 - 600	Stainless steel	-
411.2	Joint ring	125 - 600	Stainless steel	-
412.1	O-ring	40 - 600	FKM	v
412.2	O-ring for flange sealing	40 - 600	Nitrile	-
413	Liner	40 - 600	PFA	F
500	Anti-static ring	40 - 600	Stainless steel	-
511	Backing ring	40 - 600	Silicone	S
511	Backing ring	40 - 600	FKM on request	V
55-2.1	Anti-friction disc	40 - 600	Stainless steel	-
55-2.2	Anti-friction disc	125 - 600	Stainless steel	-
550	Single-piece shaft/valve disc assembly, PFA-encapsulated	40 - 300	Core made of stainless steel 1.4027 (13 % Cr), PFA-encapsulated[5)]	6kF
550	Single-piece shaft/valve disc assembly, PFA-encapsulated	350 - 600	Core with disc made of steel and shaft made of stainless steel 1.4027 (13 % Cr), PFA-encapsulated	6kF
550	Single-piece shaft/valve disc assembly, PFA-encapsulated	40 - 300	Core made of stainless steel 1.4469 / A890 Gr. 5A, PFA-encapsulated	5gF
914	Fastening screw for body sections	40 - 600	Stainless steel A2-70	-
937.1	Tension helical spring	40 - 600	Stainless steel	-
937.2	Tension helical spring	125 - 600	Stainless steel	-
970.1	Name plate	40 - 600	Stainless steel	-
970.2	Name plate	40 - 600	Stainless steel	-
970.3	Name plate	40 - 600	Stainless steel	-

5 DN > 300 on request

Version with metal valve disc

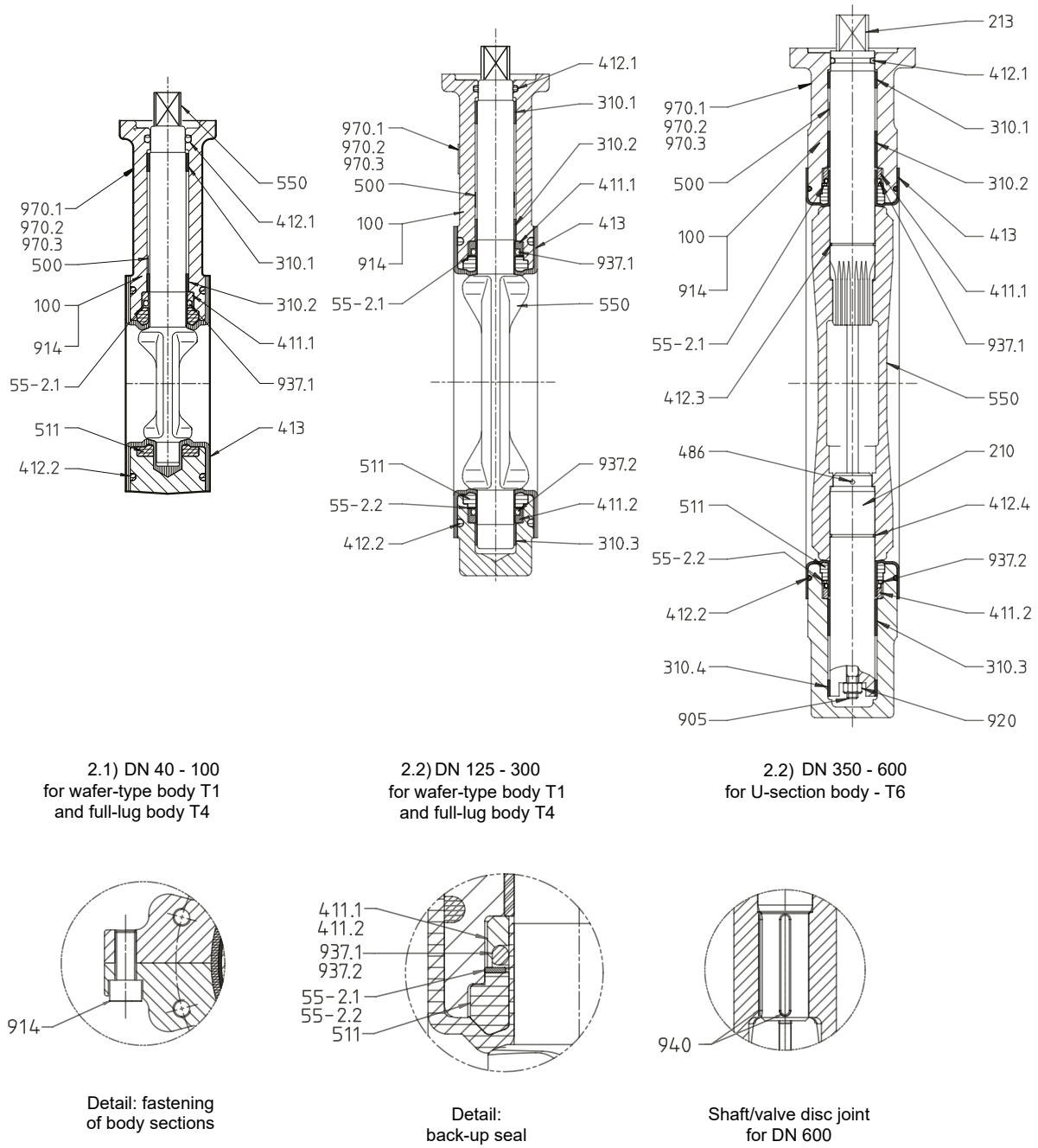

Fig. 2: Sectional drawings of KE Plastomer with metal valve disc for DN 40 - 600

2.1) back-up seal at upper shaft section: part Nos. 411.1, 937.1 and 55-2.1

2.2) back-up seal at upper and lower shaft sections: part Nos. 411.1, 411.2, 937.1, 937.2, 55-2.1 and 55-2.2

0165.1/04-EN

Table 10: List of components

Part No.	Description	DN	Materials	KSB code
100	Upper and lower body section, T1 and T4	40 - 300	Nodular cast iron EN-GJS-400-18U-LT (JS 1049)	3l
100	Upper and lower body section, T6	350 - 600	Nodular cast iron EN-GJS-400-15 (JS 1030)	3g
210	Shaft	40 - 600	Stainless steel 1.4542 (17 % Cr)	6e
213	Actuating shaft	350 - 600	Stainless steel 1.4542 (17 % Cr)	6e
310.1	Plain bearing	40 - 600	Steel with reinforced PTFE coating	-
310.2	Plain bearing	40 - 600	Steel with reinforced PTFE coating	-
310.3	Plain bearing	125 - 600	Steel with reinforced PTFE coating	-
310.4	Plain bearing	350 - 600	Steel with reinforced PTFE coating	-
411.1	Joint ring	40 - 600	Stainless steel	-
411.2	Joint ring	125 - 600	Stainless steel	-
412.1	O-ring	40 - 600	FKM	-
412.2	O-ring for flange sealing	40 - 600	Nitrile	-
412.3	O-ring for flange sealing	350 - 600	Nitrile	-
412.4	O-ring for flange sealing	350 - 600	Nitrile	-
413	Liner	40 - 600	PFA	F
486	Ball	350 - 600	Steel	-
500	Anti-static ring	40 - 600	Stainless steel	-
511	Backing ring	40 - 600	Silicone	S
511	Backing ring	40 - 600	FKM on request	V
55-2.1	Anti-friction disc	40 - 600	Stainless steel	-
55-2.2	Anti-friction disc	125 - 600	Stainless steel	-
550	Valve disc	40 - 300	Stainless steel 1.4408 and A351 Gr. CF8M (double marking)	6
550	Valve disc	350-600	Stainless steel A351 Gr. CF8M	6
550	Valve disc	40 - 300	Stainless steel 1.4408, polished, and A351 Gr. CF8M, polished, (double marking)	6i
550	Valve disc	350 - 600	Stainless steel A351 Gr. CF8M, polished	6i
905	Tie bolt	350 - 600	Steel	-
914	Fastening screw for body sections	40 - 600	Stainless steel A2-70	-
920	Hexagon nut	350 - 600	Steel + polyamide 6	-
937.1	Tension helical spring	40 - 600	Stainless steel	-
937.2	Tension helical spring	125 - 600	Stainless steel	-
940	Key	600	Steel	-
970.1	Name plate	40 - 600	Stainless steel	-
970.2	Name plate	40 - 600	Stainless steel	-
970.3	Name plate	40 - 600	Stainless steel	-

Materials of KE Elastomer

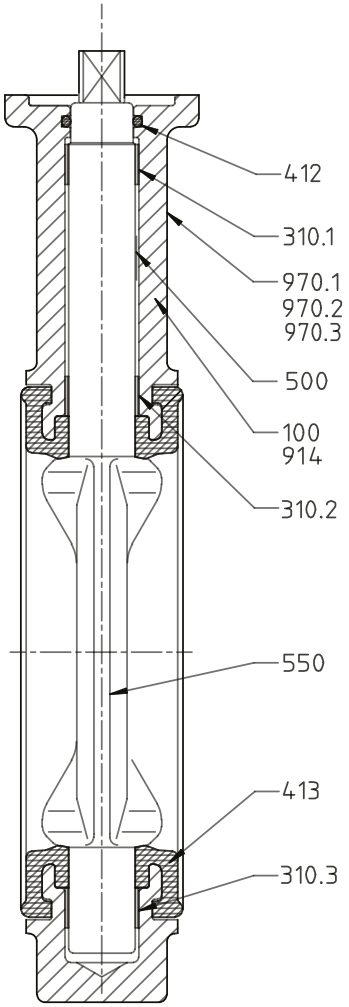

DN 40 - 300

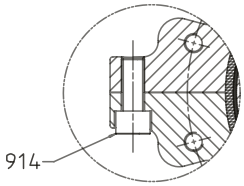

Detail: joining of body sections

Fig. 3: Sectional drawings of KE Elastomer for DN 40 - 300

0165.1/04-EN

Table 11: List of components

Part No.	Description	DN	Materials	KSB code
100	Upper and lower body section, T1 and T4	40 - 300	Nodular cast iron EN-GJS-400-18U-LT (JS 1049)	3l
310.1	Plain bearing	40 - 300	Steel with reinforced PTFE coating	-
310.2	Plain bearing	40 - 300	Steel with reinforced PTFE coating	-
310.3	Plain bearing	40 - 300	Steel with reinforced PTFE coating	-
412	O-ring	40 - 300	VITON	-
413	Liner	40 - 300	EPDM	XA
413	Liner	40 - 300	EPDM, heat-resistant	XV
413	Liner	40 - 300	Carboxylated nitrile	CB
413	Liner	40 - 300	HYPALON (chlorosulfonated) polyethylene	Y
413	Liner	40 - 300	Nitrile HC	K
413	Liner	40 - 300	Fluoroelastomer VITON®, heat-resistant	VC
413	Liner	40 - 300	Carboxylated nitrile, white	CC
500	Anti-static ring	150 - 300	Stainless steel 1.4310	-
550	Valve disc	40 - 300	Stainless steel 1.4408 and A351 Gr. CF8M (double marking)	6
550	Valve disc	40 - 300	Stainless steel 1.4408, polished, and A351 Gr. CF8M, polished, (double marking)	6i
550	Valve disc	40 - 300	NORIHARD white cast iron	5h
550	Single-piece shaft/valve disc assembly, PFA-encapsulated	40 - 300	Core made of stainless steel 1.4027 (13 % Cr), PFA-encapsulated	6kF
550	Single-piece shaft/valve disc assembly, PFA-encapsulated	40 - 300	Core made of stainless steel 1.4469 / A890 Gr. 5A, PFA-encapsulated	5gF
914	Fastening screw for body sections	40 - 300	Stainless steel A2-70	-
970.1	Name plate	40 - 300	Stainless steel	-
970.2	Name plate	40 - 300	Stainless steel	-
970.3	Name plate	40 - 300	Stainless steel	-

Variants

KE Plastomer

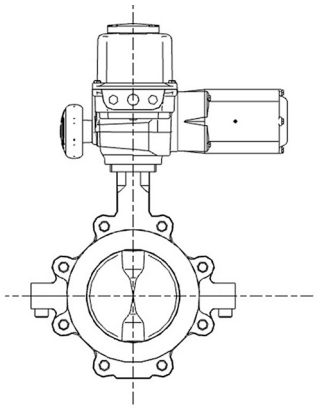

Electric actuator

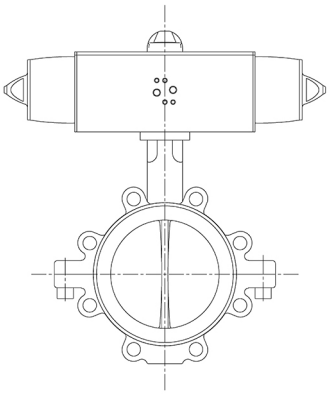

ACTAIR EVO / DYNACTAIR EVO pneumatic actuator

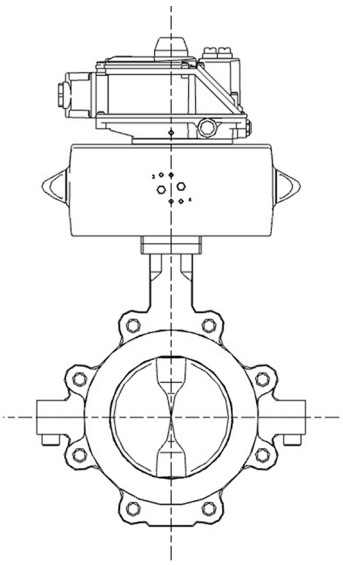

ACTAIR EVO 2 to 160 / DYNACTAIR EVO 1 to 80
AMTRONIC U / SMARTRONIC U positioner

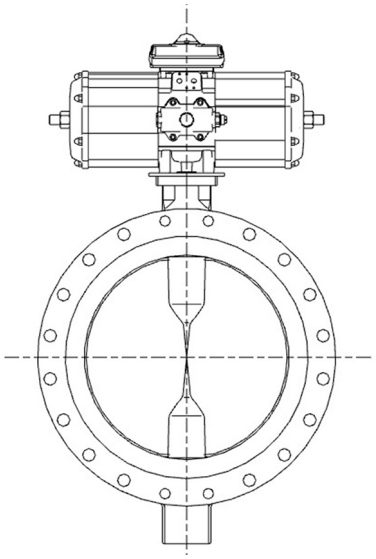

ACTAIR EVO / DYNACTAIR EVO +
AMTROBOX limit switch box

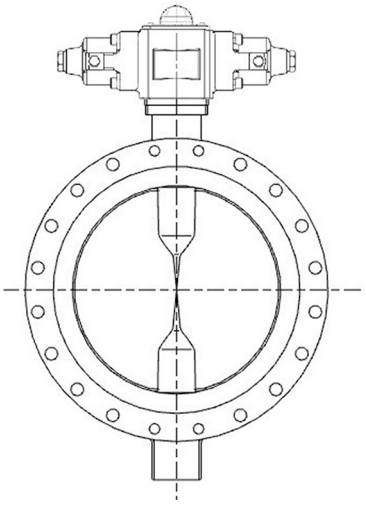

HQ hydraulic actuator

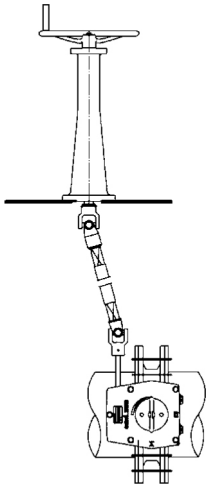

Deck stand

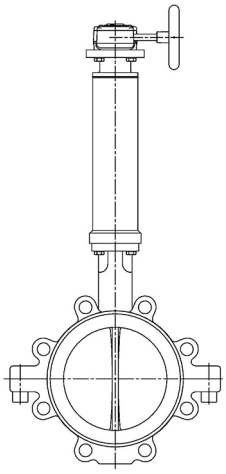

Neck extension

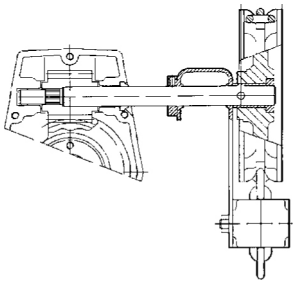

Actuation via chain wheel

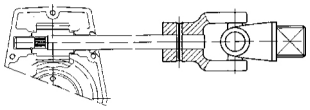

Cardan connection

0165.1/04-EN

KE Elastomer

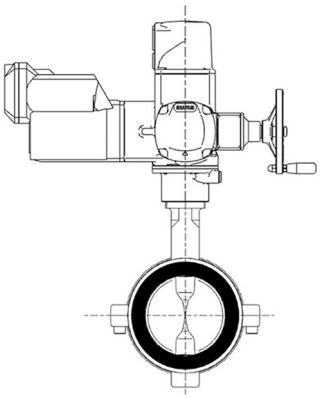

Electric actuator

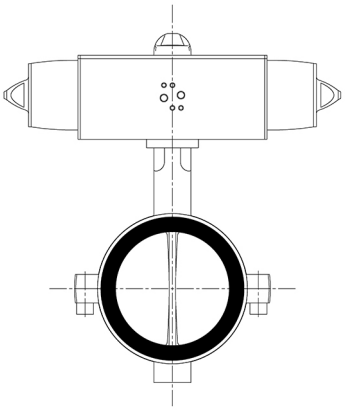

ACTAIR EVO / DYNACTAIR EVO pneumatic actuator

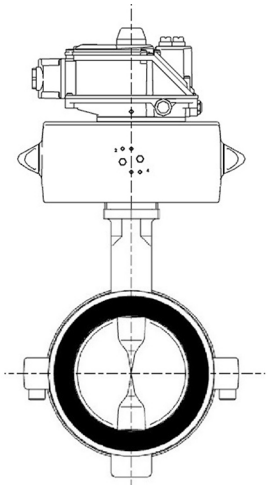

ACTAIR EVO / DYNACTAIR EVO +
AMTRONIC U / SMARTRONIC U positioner

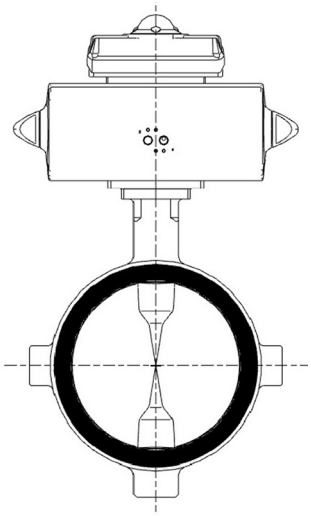

ACTAIR EVO / DYNACTAIR EVO +
AMTROBOX limit switch box

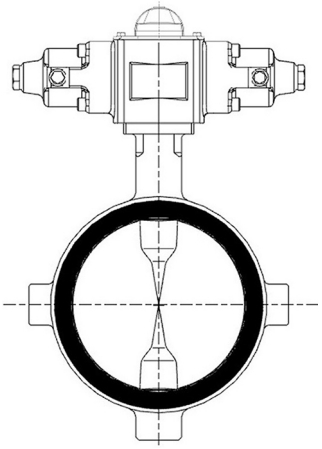

HQ hydraulic actuator

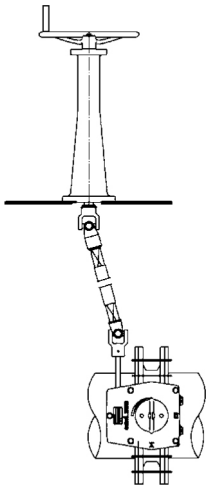

Deck stand

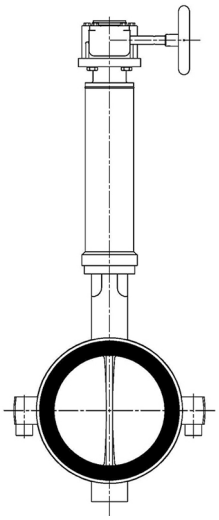

Neck extension

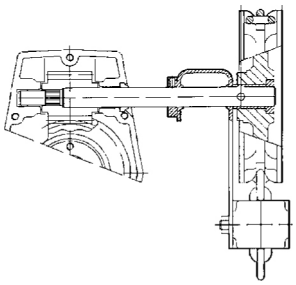

Actuation via chain wheel

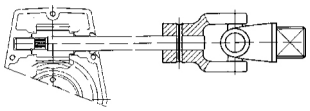

Cardan connection

0165.1/04-EN

Dimensions and weights

Dimensions of KE with bare shaft end for body types T1, T4 and T6

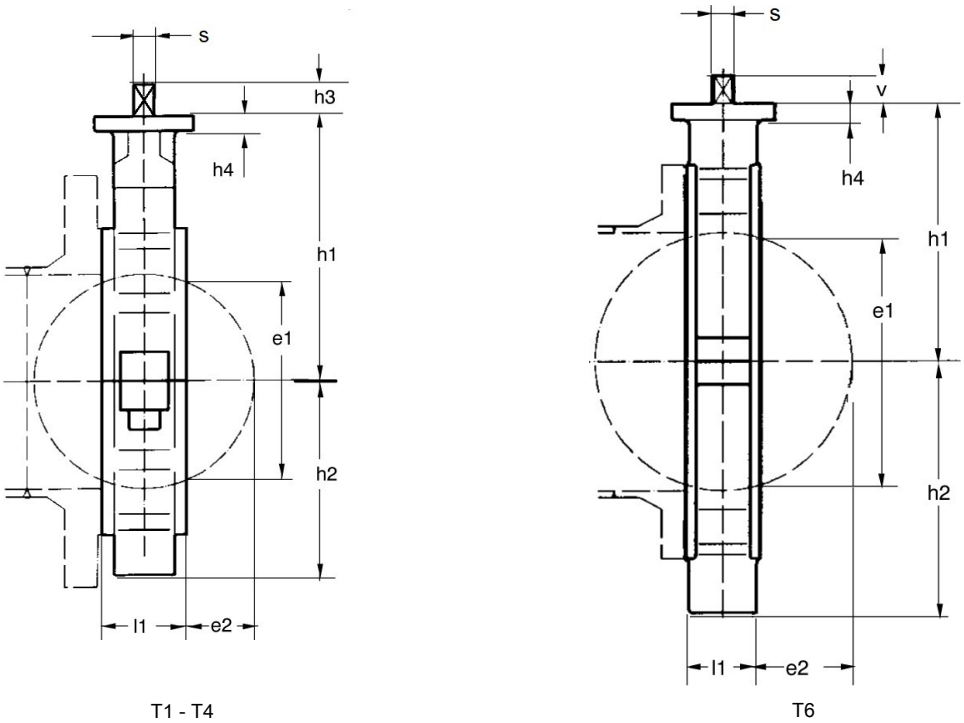

Fig. 4: Sectional drawing KE

Table 12: Dimensions [mm]

DN	NPS	l1	h1	Body T1	Body T4	Body T6	Top flange to ISO 5211		Shaft end Square end		Valve disc open	
	[inch]			h2	h2	h2	No.	h4	∅s	h3	e1	e2
40	1½	33	125	51	54	-	F05	10	L11	12	27	4
50	2	43	135	51	60	-	F05	10	L11	12	38	6
65	2½	46	145	61	67	-	F05	10	L11	12	51	10
80	3	46	160	74	89	-	F05	10	L11	12	69	17
100	4	52	175	90	105	-	F05	10	L14	16	90	24
125	5	56	195	113	118	-	F07	12	L14	16	116	35
150	6	56	210	132	132	-	F07	12	L14	16	145	47
200	8	60	240	165	165	-	F10	15	L17	19	196	70
250	10	68	275	196	196	-	F10	15	L22	24	247	91
300	12	78	310	232	232	-	F12	18	L22	24	293	111
350	14	104[6)]	349	-	-	340	F14	22	L27	29	335	123
400	16	104	374	-	-	373	F14	22	L36	38	387	148
450	18	129[6)]	424	-	-	432	F14	22	L36	38	432	161
500	20	129	450	-	-	451	F16	26	L46	48	484	186
600	24	154	505	-	-	511	F16	26	L46	48	562	214

0165.1/04-EN

6 Face-to-face length does not comply with ISO 5752-20.

Dimensions and weights KE + lever S+/SR+

The selection of actuators given below typically applies to butterfly valves handling lubricating fluids at the maximum flow velocities shown.

Higher flow velocities and further actuator/valve combinations are possible, depending on the operating conditions and hydraulic characteristics. Please contact us.

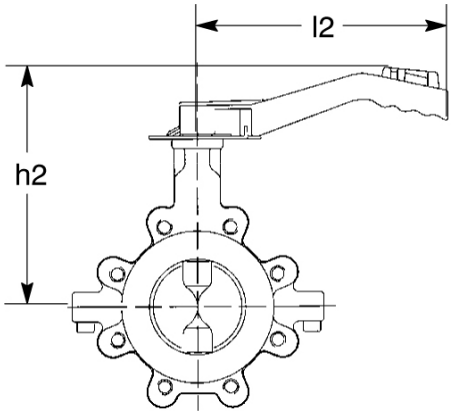

Fig. 5: Unit comprising KE + lever S+ or SR+

Table 13: Actuation via lever S+ or SR+ [mm]

DN	NPS [inch]	Max. velocity [m/s]	l2	h2	[kg] [7]
40	1½	5,0	180	180	0,5
50	2	5,0	180	190	0,5
65	2½	5,0	180	200	0,5
80	3	5,0	260	235	0,6
100	4	5,0	260	250	0,6
125	5	5,0	330	280	0,7
150	6	5,0	330	295	0,7

7 The weights given refer to the actuating element.

Dimensions and weights of KE + lever SP+

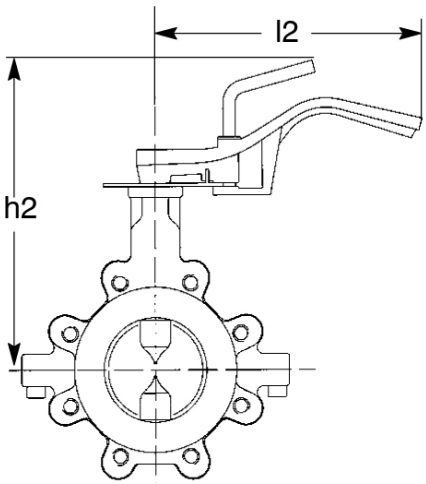

Fig. 6: Unit comprising KE + lever SP+

Table 14: Actuation via lever SP+ [mm]

DN	NPS	Max. velocity	l2	h2	[kg] [8]
	[inch]	[m/s]			
40	1½	5,0	260	193	0,7
50	2	5,0	260	203	0,7
65	2½	5,0	260	213	0,7
80	3	5,0	260	228	0,7
100	4	5,0	260	243	0,7
125	5	5,0	330	277	0,8
150	6	5,0	330	292	0,8

0165.1/04-EN

8 The weights given refer to the actuating element.

Dimensions and weights of KE + lever CR+ or CM+

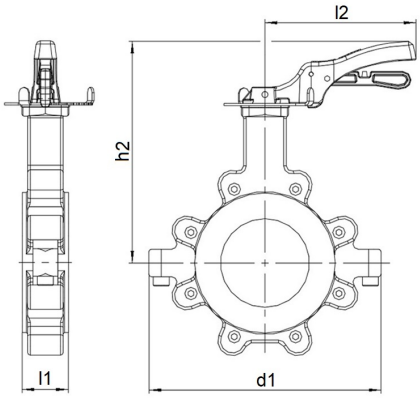

Fig. 7: Unit comprising KE + lever CR+ or CM+

Table 15: Actuation via lever CR+ or CM+ [mm]

DN	NPS	Max. velocity	Lever CR+ or CM+				
	[inch]	[m/s]	l1	d1	l2	h2	[kg][9]
40	1½	5,0	33	147	165	198	0,8
50	2	5,0	43	165	165	208	0,8
65	2½	5,0	46	180	165	218	0,8
80	3	5,0	46	191	165	233	0,8
100	4	5,0	52	224	230	261	1,2
125	5	5,0	56	261	300	294	1,7
150	6	5,0	56	288	300	309	1,7
200	8	5,0	60	379	510[10]	353	3,1

9 The weights given refer to the actuating element.
10 High actuating torque, manual gearbox recommended

Dimensions and weights of KE + MS manual gearbox

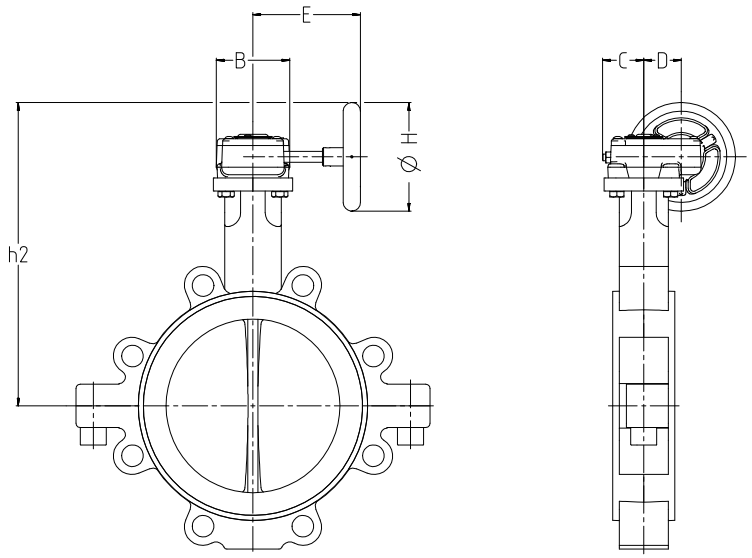

Fig. 8: Unit comprising KE + MS manual gearbox

Table 16: Actuation via MS manual gearbox [mm]

DN	NPS	Max. velocity	Type	B	C	D	E	H	h2	[kg][11]
	[inch]	[m/s]								
40	1½	5,0	MS15	68	39	34,4	153	100	194,5	1,2
50	2	5,0	MS15	68	39	34,4	153	100	204,5	1,2
65	2½	5,0	MS15	68	39	34,4	153	100	214,5	1,2
80	3	5,0	MS15	68	39	34,4	153	100	229,5	1,2
100	4	5,0	MS15	68	39	34,4	153	100	244,5	1,2
125	5	5,0	MS15	68	39	34,4	153	100	264,5	1,2
150	6	5,0	MS15	68	39	34,4	153	100	279,5	1,2
200	8	5,0	MS30	88	47	41,3	231	200	367,5	2,7
250	10	5,0	MS30	88	47	41,3	231	200	402,5	2,7
300	12	5,0	MS50	110,5	57	55	245	250	468,5	5,4
350	14	5,0	MS100	135	66,4	68,8	298	400	507,5	8,7
400	16	5,0	MS100	135	66,4	68,8	298	400	611,5	8,7
450	18	5,0	MS100	135	66,4	68,8	298	400	661,5	8,7
500	20	5,0	MS200	156	77	81,3	276	500	687,5	12,5
600	24	5,0	MS200	156	77	81,3	276	500	807,5	12,5

0165.1/04-EN

11 The weights given refer to the actuating element.

Dimensions and weights of KE + MC manual gearbox

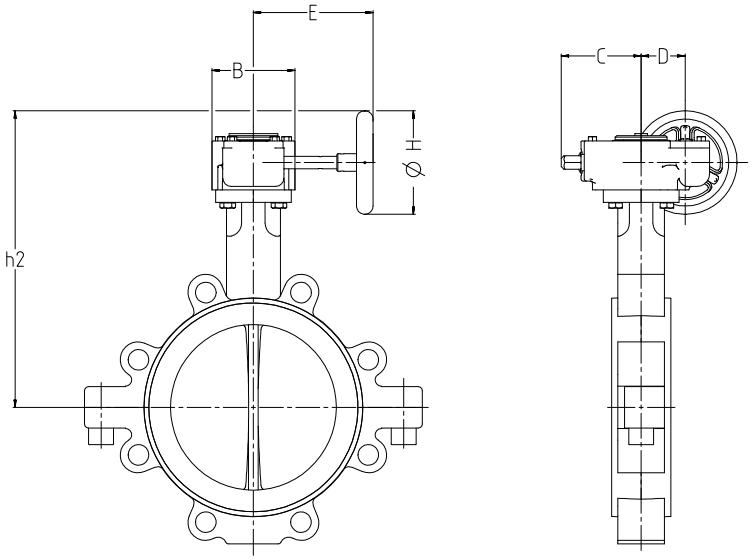

Fig. 9: Unit comprising KE + MC manual gearbox

Table 17: Actuation via MC manual gearbox for KE [mm]

DN	NPS	Max. velocity	Type	B	C	D	E	H	h2	[kg][12)]
	[inch]	[m/s]								
40	1½	3,0	MC15	80	75	42,5	115,5	100	201,5	2,4
50	2	3,0	MC15	80	75	42,5	115,5	100	211,5	2,4
65	2½	3,0	MC15	80	75	42,5	115,5	100	221,5	2,4
80	3	3,0	MC15	80	75	42,5	115,5	100	236,5	2,4
100	4	3,0	MC15	80	75	42,5	115,5	100	251,5	2,4
125	5	3,0	MC15	80	75	42,5	115,5	100	271,5	2,4
150	6	3,0	MC15	80	75	42,5	115,5	100	286,5	2,4
200	8	3,0	MC30	102	62	52	198	200	368,5	4,3
250	10	3,0	MC30	102	62	52	198	200	403,5	4,3
300	12	3,0	MC50	102	62	52	203	250	463,5	5,0
350	14	3,0	MC100	138	93	71	297	400	502,5	11,3
400	16	3,0	MC100	138	93	71	297	400	614,5	11,3
450	18	2,5	MC100	138	93	71	297	400	664,5	11,3
500	20	2,5	MC200	200	106	86	305	500	690,5	17,5
600	24	2,5	MC200	200	106	86	305	500	797	17,5

12 The weights given refer to the actuating element.

Line connections

Table 18: Wafer-type body - T1

DN	NPS	EN 1092		ASME
	[inch]	PN 10	PN 16	B16.5 Cl.150
40	1½	✓	✓	✓
50	2	✓	✓	✓
65	2½	✓	✓	✓
80	3	✓	✓	✓
100	4	✓	✓	✓
125	5	✓	✓	✓
150	6	✓	✓	✓
200	8	✓	✓	✓
250	10	✓	✓	✓
300	12	✓	✓	✓

Table 19: Full-lug body with raised faces - T4

DN	NPS	EN 1092		ASME
	[inch]	PN 10	PN 16	B16.5 Cl. 150
40	1½	✓	✓	✓
50	2	✓	✓	✓
65	2½	✓	✓	✓
80	3	✓	✓	✓
100	4	✓	✓	✓
125	5	✓	✓	✓
150	6	✓	✓	✓
200	8	✓	✓	✓
250	10	✓	✓	✓
300	12	✓	✓	✓

Table 20: U-section body - T6 (for KE Plastomer only)

DN	NPS	EN 1092		ASME	JIS
	[inch]	PN 10	PN 16	B16.5 Cl. 150	10K
350	14	✓	✓	✓	✓
400	16	✓	✓	✓	✓
450	18	✓	✓	✓	✓
500	20	✓	✓	✓	✓
600	24	✓	✓	✓	✓

Table 21: Symbols key

Symbol	Description
✓	Installation possible

Installation information

Dead-end service and downstream dismantling

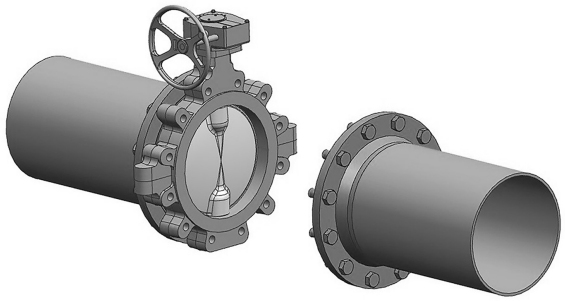

Downstream dismantling

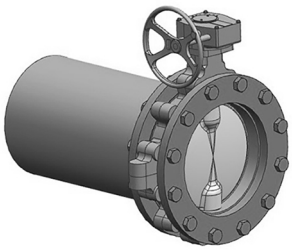

Dead-end service

For downstream dismantling,
successively loosen diagonally opposed tie rods.

Flange dimensions

The valves can be installed between all commercial mating flanges and line connections without requiring any flange gaskets.
The elastomer liner alone provides a tight seal at the flange connections.
The drawings below show a valve of body type T1 installed between flanges.
Please verify that the connection meets the requirements given below.
The flange dimensions indicated in the table apply to all body types.

KE Plastomer

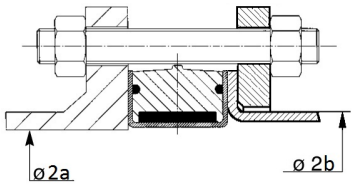

Drawing A

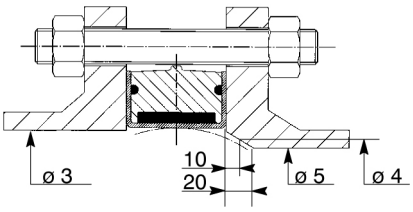

Drawing B

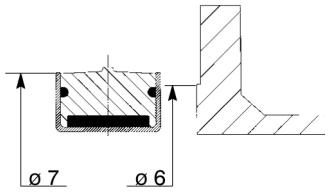

Drawing C

Ø1 and Ø3: flange face diameter
Ø2: pipe OD with loose plate flange to DIN 2642 and NF E 29-251

Table 22: Dimensions table

DN	NPS	Optimum	Max. permissible Ø	Min. permissible Ø of flange face	Min. Ø at a distance of 10 mm from the flange face	Min. Ø at a distance of 20 mm from the flange face	Min. permissible raised face Ø of flanges with raised faces	OD of PFA liner flanges
	[inch]	Ø1	Ø2	Ø3	Ø4	Ø5	Ø6	Ø7
40	1½	40	55	27	-	-	71	82
50	2	53	68	38	-	-	84	100
65	2½	65	82	51	-	-	98	120
80	3	79	97	69	50	-	113	133
100	4	98	117	90	74	43	133	158
125	5	125	143	116	104	85	162	188
150	6	148	171	145	136	122	192	212
200	8	197	223	196	189	179	244	268
250	10	249	277	247	241	233	298	320
300	12	298	329	293	288	280	350	370
350	14	348	372	344	337	329	412	430
400	16	398	423	396	390	383	462	480
450	18	447	474	441	434	427	522	533
500	20	497	524	493	487	480	572	586
600	24	579	624	570	565	558	682	676

KE Elastomer

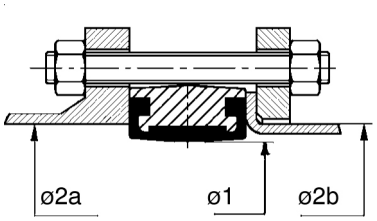

Drawing A

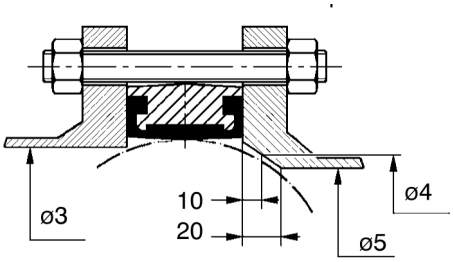

Drawing B

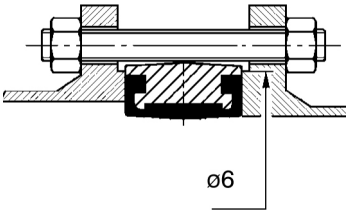

Drawing C

Ø2a and Ø3: flange face diameter

Ø2b: pipe OD with loose plate flange to DIN 2642 and NF E 29-251

Table 23: Dimensions table

DN	NPS	Optimum Ø	Max. permissible Ø		Min. permissible Ø of flange face	Min. Ø at a distance of 10mm from the flange face	Min. Ø at a distance of 20 mm from the flange face	Min. permissible raised face Ø of flanges with raised faces
	[inch]	Ø1	Ø2a	Ø2b	Ø3	Ø4	Ø5	Ø6
40	1½	40	62	49	27	-	-	82
50	2	49	78	61	38	-	-	100
65	2½	65	95	77	51	-	-	118
80	3	77	108	89	69	50	-	131
100	4	96	133	115	90	74	43	157
125	5	123	162	140	116	104	85	187
150	6	146	183	169	145	136	122	209
200	8	196	239	220	196	189	179	267
250	10	249	290	273	247	241	233	319
300	12	298	336	324	297	288	280	367

Bolting and weights

Bolting and weights for wafer-type body - T1

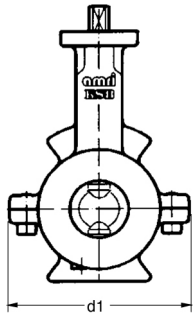

Drawing KE - T1 DN 40

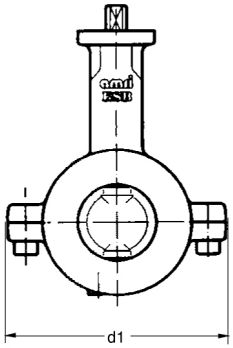

Drawing KE - T1 DN 65

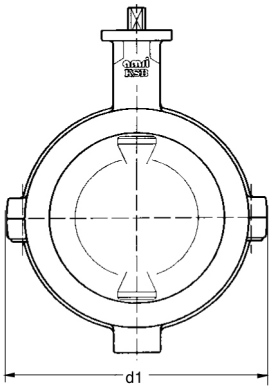

Drawing KE - T1 DN 250

N.B.: Bolting is not included in our standard scope of supply.

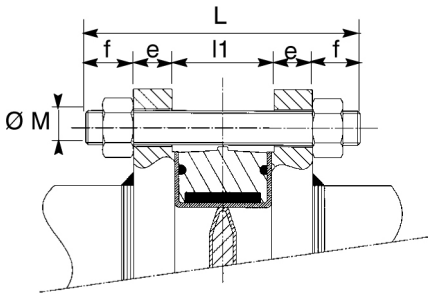

Sectional drawing of T1 body bolting with tie rods

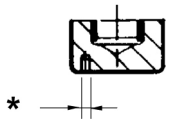

Earthing detail

Length of tie rods L = l1 + 2e + 2f

L: minimum length of tie rods
l1: face-to-face length of valve
e: flange thickness (customer-specific)
f: thickness of nut + standardised overhang of tie rod

*: M5 depth 7 for earth connection

0165.1/04-EN

Table 24: Dimensions [mm] and weights [kg] for wafer-type body T1 - connections EN 1092-1 PN 10 and PN 16

DN	NPS	l1	d1	EN 1092-1 PN 10			EN 1092-1 PN 16			[kg]
				Ø M	Tie bolt		Ø M	Tie bolt		
	[inch]				f	Qty[13)]		f	Qty[13)]	
40	1½	33	124	M16	18	4	M16	18	4	2,0
50	2	43	150	M16	18	4	M16	18	4	2,7
65	2½	46	170	M16	18	4/8	M16	18	4/8	3,8
80	3	46	138	M16	18	8	M16	18	8	4,6
100	4	52	188	M16	18	8	M16	18	8	6,6
125	5	56	214	M16	18	8	M16	18	8	9,5
150	6	56	244	M20	22	8	M20	22	8	11,9
200	8	60	276	M20	22	8	M20	22	12	16,5
250	10	68	312	M20	22	12	M24	26	12	24,0
300	12	78	444	M20	22	12	M24	26	12	38,0

Table 25: Dimensions [mm] and weights [kg] for wafer-type body T1 - connections to ASME B16.5 Class 150

DN	NPS	l1	d1	ASME B16.5 class 150			[kg]
				UNC	Tie bolt		
	[inch]			[inch]	f	Qty[13)]	
40	1½	33	124	1/2	16	4	2,0
50	2	43	150	5/8	18	4	2,7
65	2½	46	170	5/8	18	4	3,8
80	3	46	138	5/8	18	4	4,6
100	4	52	188	5/8	18	8	6,6
125	5	56	214	3/4	22	8	9,5
150	6	56	244	3/4	22	8	11,9
200	8	60	276	3/4	22	8	16,5
250	10	68	312	7/8	26	12	24,0
300	12	78	444	7/8	26	12	38,0

13 Number of bolts per side

Bolting and weights for full-lug body with raised faces - T4

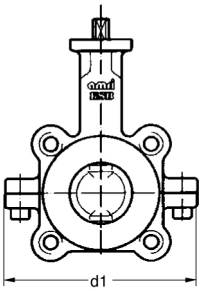

Drawing KE - T4 DN 65

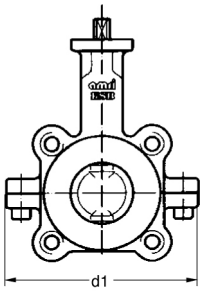

Drawing KE - T4 DN 150

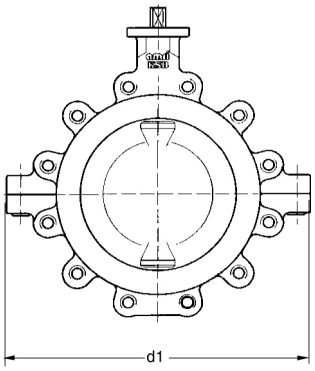

Drawing KE - T4 DN 250

N.B.: Bolting is not included in our standard scope of supply.

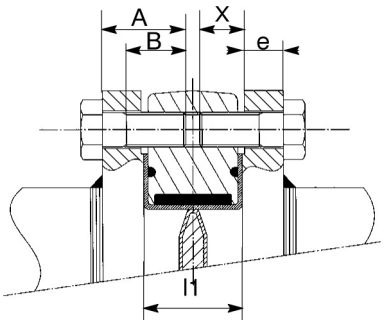

Sectional drawing of T4 body bolting by bolts

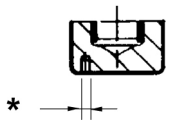

Earthing detail

Max. bolt length

A = e + X

*: M5 depth 7 for earth connection

A: max. length of bolts

X: max. thread engagement depth

e: flange thickness (customer-specific)

B: min. thread length > A-e

l1: face-to-face length of valve

0165.1/04-EN

Table 26: Dimensions [mm] and weights [kg] for full-lug body with raised faces T4 - connections EN 1092-1, PN 10 and PN 16

DN	NPS	l1	d1	EN 1092-1 PN 10			EN 1092-1 PN 16			[kg]
				Ø M	Tie bolt		Ø M	Tie bolt		
	[inch]				f	Qty [14)]		f	Qty[14)]	
40	1½	33	147	M16	14	4	M16	14	4	2,7
50	2	43	165	M16	18	4	M16	18	4	3,7
65	2½	46	180	M16	20	4/8	M16	20	4/8	4,8
-	3	46	191	-	-	-	-	-	-	5,6
80	-	46	224	M16	20	8	M16	20	8	6,1
100	4	52	261	M16	22	8	M16	22	8	8,6
125	5	56	288	M16	22	8	M16	22	8	12,5
150	6	56	326	M20	26	8	M20	26	8	15,2
200	8	60	379	M20	26	8	-	-	-	22,0
200	8	60	392	-	-	-	M20	26	12	23,0
250	10	68	482	M20	26	12	M24	30	12	36,0
300	12	78	562	M20	26	12	M24	30	12	56,0

Table 27: Dimensions [mm] and weights [kg] for full-lug body with raised faces T4 - connections ASME B16.5 Class 150

DN	NPS	l1	d1	ASME B16.5 class 150			[kg]
				UNC	Tie bolt		
	[inch]			[inch]	f	Qty[14)]	
40	1½	33	147	1/2	14	4	2,7
50	2	43	165	5/8	18	4	3,7
65	2½	46	180	5/8	20	4	4,8
-	3	46	191	5/8	20	4	5,6
80	-	46	224	-	-	-	6,1
100	4	52	261	5/8	22	8	8,6
125	5	56	288	3/4	23	8	12,5
150	6	56	326	3/4	26	8	15,2
200	8	60	379	3/4	26	8	22,0
200	8	60	392	-	-	-	23,0
250	10	68	482	7/8	28	12	36,0
300	12	78	562	7/8	28	12	56,0

14 Number of bolts per side

Bolting and weights for U-section body with raised faces - T6

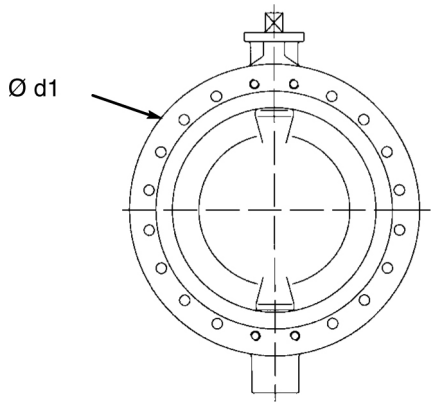

Drawing KE - T6 DN 600

N.B.: Bolting is not included in our standard scope of supply.

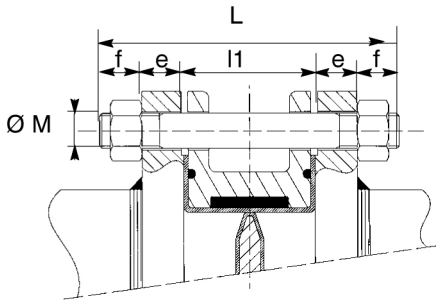

Sectional drawing of T6 body bolting with tie rods

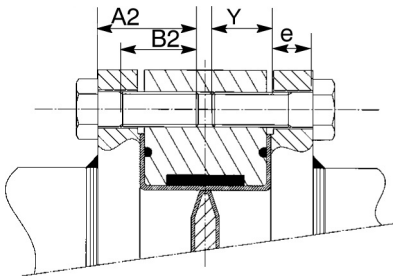

Sectional drawing of T6 body bolting at shaft passage

Earthing detail

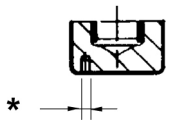

Length of tie rods

L = l1 + 2e + 2f

L: minimum length of tie rods

l1: face-to-face length of valve

e: flange thickness (customer-specific)

f: thickness of nut + standardised overhang of tie rod

Max. bolt length

A2 = e + Y

A: max. bolt length

X: max. thread engagement depth

e: flange thickness (customer-specific)

B2: min. bolt thread length > A2-e

*: M5 depth 7 for earth connection

0165.1/04-EN

Table 28: U-section body with raised faces - T6 for EN 1092-1 PN 10 and PN 16

DN	NPS	l1	d1	EN 1092-1 PN 10					EN 1092-1 PN 16					[kg]
				Ø M	Tie bolt		Bolt A2		Ø M	Tie bolt		Bolt A2		
	[inch]				f	Qty [15]	Y	Qty [16]		f	Qty[15]	Y	Qty[16]	
350	14	104[17]	534	M20	29	16	-	-	M24	29	16	-	-	78
400	16	104	597	M24	29	16	-	-	M27	29	16	-	-	105
450	18	129[17]	635	M24	29	16	22	4	M27	32	16	20	4	150
500	20	129	698	M24	29	16	26	4	M30	35	16	26	4	200
600	24	154	830	M27	32	12	31	4	M33	38	16	31	4	300

Table 29: U-section body with raised faces - T6 for ASME B16.5 Class 150

DN	NPS	l1	d1	ASME B16.5 class 150					[kg]
				UNC	Tie bolt		Bolt A2		
	[inch]				f	Qty[15]	Y	Qty[16]	
350	14	104[17]	534	1	32	12	-	-	78
400	16	104	597	1	32	12	-	-	105
450	18	129[17]	635	$1^1/_8$	35	16	33	4	150
500	20	129	698	$1^1/_8$	35	16	26	4	200
600	24	154	830	$1^1/_4$	38	16	26	4	300

0165.1/04-EN

15 Quantity of nuts = quantity of tie rods x 2
16 Number of bolts per side
17 Face-to-face length does not comply with ISO 5752-20.

2024-04-04

0165.1/04-EN

KSB S.A.S.
4, allée des Barbanniers • 92635 Gennevilliers Cedex (France)
Tél. 09 69 39 29 79
www.ksb.com/fr-fr