Gate Valve

ECOLINE GTC 150-600

Type Series Booklet

Legal information/Copyright

Type Series Booklet ECOLINE GTC 150-600

All rights reserved. The contents provided herein must neither be distributed, copied, reproduced, edited or processed for any other purpose, nor otherwise transmitted, published or made available to a third party without the manufacturer's express written consent.

Subject to technical modification without prior notice.

© KSB SE & Co. KGaA, Frankenthal 2023-09-07

Contents

Gate Valves **4**
Gate Valves to ANSI/ASME with Bolted Bonnet 4
ECOLINE GTC 150-600 4
Main applications 4
Fluids handled 4
Operating data 4
Valve body materials 4
Design details 4
Product benefits 5
Product information 5
Related documents 5
Purchase order specifications 5
Pressure/temperature ratings 6
Materials 8
Variants 9
Dimensions and weights 10
Installation information 11

Gate Valves

Gate Valves to ANSI/ASME with Bolted Bonnet

ECOLINE GTC 150-600

Main applications

- Boiler feed applications
- Fossil-fuelled power stations
- Petrochemical industry
- Refinery
- Process engineering

Fluids handled

- Steam
- Fluids containing gas
- Gas
- Hot water
- Boiler feed water

Operating data

Table 1: Operating properties

Characteristic	Value
Nominal pressure	Class 150 - 600
Nominal size [inch]	NPS 2 - 24
Max. permissible pressure [bar]	106
Max. permissible pressure [psi]	1500
Min. permissible temperature [°C]	≥ 0
Min. permissible temperature [°F]	≥ 32
Max. permissible temperature [°C]	≤ +649
Max. permissible temperature [°F]	≤ +1200

Temperatures < 0 °C on request

Selection as per pressure/temperature ratings (⇨ Page 6)

Valve body materials

Table 2: Overview of available materials

Material	Temperature limit	
	[°C]	[°F]
ASTM A216 WCB	≤ 427	≤ 800
ASTM A217 WC6	≤ 593	≤ 1100
ASTM A217 WC9	≤ 593	≤ 1100
ASTM A217 C5	≤ 649	≤ 1200
ASTM A217 C12	≤ 649	≤ 1200
ASTM A352 LCB	≤ 343	≤ 650
ASTM A352 LCC	≤ 343	≤ 650
ASTM A351 CF8	≤ 427	≤ 800
ASTM A351 CF8M	≤ 427	≤ 800

Other materials on request.

Design details

Design

- Gate valve to API 600-2009
- Tested to API 598
- Body made of cast steel or stainless steel
- Flexible wedge
- Bolted cover
- Non-rotating stem
- Non-rising handwheel
- Stem sealed by gland packing
- Two-piece self-aligning gland follower
- Die-moulded graphite gland packing with braided graphite packing end rings
- Stainless steel/graphite gaskets
- Stem with burnished shank
- Stem nut made of nickel steel
- Outside screw
- Sealing surfaces made of wear and corrosion resistant materials
- Back seat
- Hardened back seat bush
- Outside yoke
- Yoke head suitable for mounting electric and pneumatic actuators (DIN ISO 5210)

Variants

- Limit switch(es)
- Locking device
- Stem protecting tube
- Stem protecting tube with position indicator
- Drain plug
- Hard-faced back seat
- Pressure relief arrangement
- Bypass
- Free stem end and top flange to ISO 5210
- Gearbox
- Electric actuators

7362.11/08-EN

- Version in compliance with TA-Luft (German Clean Air Act) to VDI 2440 for temperatures up to 400 °C
- Non-destructive testing, e.g. radiographic testing
- Inspections to technical codes such as AD2000 or IBR
- Gate valve to API 600-2015
- NACE standard
- Other flanged end designs or butt weld ends to ASME B16.25
- Version in compliance with API 624 fugitive emission requirements.
- Larger nominal sizes and other variants on request
- Customised design for molten salt application (ECOLINE GTC-HS type series)

Product benefits

- Stem with burnished shank for long service life and high functional reliability of the gland packing
- Hard-faced body seat and solid sealing surface of flexible wedge made of wear-resistant and corrosion-proof materials for reliable sealing and longer service life.
- Two-piece self-aligning gland follower ensures even compression of packing rings.
- Packing end rings of the graphite gland packing enable higher compressive force by gland follower and prevent extrusion of middle graphite packing rings.
- Serrated bonnet gasket fully confined to prevent creep, for reliable sealing

(Class 150: flat body/bonnet interface due to square or oval flange design to comply with limited face-to-face length specified by design standard).

- Additional safety and blow-out protection by standard back seat.
- Stem nut free from non-ferrous metals, for versatile application.
- Extended maintenance-free service life
  - Hard-facing applied to valve disc and seat rings by deposit welding provides extra wear allowance.
  - Integral seating surface

Product information

Product information as per Regulation No. 1907/2006 (REACH)

For information as per European chemicals regulation (EC) No. 1907/2006 (REACH) see https://www.ksb.com/en-global/company/corporate-responsibility/reach.

Product information as per European Pressure Equipment Directive 2014/68/EU (PED)

The valves satisfy the safety requirements of Annex I of the European Pressure Equipment Directive 2014/68/EU (PED) for fluids in Groups 1 and 2.

Product information as per UK Pressure Equipment (Safety) Regulations 2016

The valves satisfy the safety requirements of the UK Pressure Equipment (Safety) Regulations 2016 (PER) for fluids in Groups 1 and 2.

Product information as per Directive 2014/34/EU (ATEX)

The valves do not have a potential internal source of ignition and can be used in potentially explosive atmospheres, Group II, category 2 (zones 1+21) and category 3 (zone 2+22) to ATEX 2014/34/EU.

Product information as per UK Equipment and Protective Systems Intended for Use in Potentially Explosive Atmospheres Regulations 2016

The valves do not have a potential internal source of ignition and can be used in accordance with the UK's Equipment and Protective Systems Intended for Use in Potentially Explosive Atmospheres Regulations 2016 in potentially explosive atmospheres, Group II, category 2 (zones 1+21) and category 3 (zone 2+22).

Related documents

Table 3: Information/documents

Document	Reference number
ECOLINE GLC 150-600 type series booklet	7362.12
ECOLINE SCC 150-600 type series booklet	7362.13
Operating manual	0570.86
Operating manual (valves for molten salt application)	7372.81

Purchase order specifications

Please specify the following information in all enquiries or purchase orders:

1. Type
2. Class
3. Nominal size
4. Design pressure
5. Design temperature
6. Differential pressure
7. Fluid handled
8. Material
9. Trim material (API trim number)
10. Line connection
11. Pipe schedule (for butt weld ends)
12. Variants
13. Reference number

7362.11/08-EN

Pressure/temperature ratings

Table 4: Permissible operating pressure [bar] (to ASME B16.34)

Class	Material	[°C]																							
		-29 to 38	93	149	204	260	316	343	371	399	427	454	482	510	538	566	593	621	649	677	704	732	760	788	816
150	A216 WCB [1]	19,7	17,9	15,9	13,8	11,7	9,7	8,6	7,6	6,6	5,5	4,5	3,4	2,4	1,4	-	-	-	-	-	-	-	-	-	-
300		51,0	46,9	45,2	43,8	41,7	39,3	37,9	36,5	34,8	28,3	22,1	15,9	9,3	5,9	-	-	-	-	-	-	-	-	-	-
600		102,0	93,8	90,3	87,2	83,1	78,3	75,8	73,1	70,0	56,9	44,1	31,7	19,0	11,7	-	-	-	-	-	-	-	-	-	-
150	A217 WC6 [2][3][4]	20,0	17,9	15,9	13,8	11,7	9,7	8,6	7,6	6,6	5,5	4,5	3,4	2,4	1,4	1,4 [5]	1,4 [5]	-	-	-	-	-	-	-	-
300		51,7	51,7	49,6	47,9	45,9	41,7	40,7	39,3	36,5	35,2	33,4	31,0	22,1	14,8	10,0	6,6	-	-	-	-	-	-	-	-
600		103,4	103,4	99,6	95,5	91,7	83,4	81,0	78,3	73,4	70,0	67,2	62,1	44,1	29,6	20,0	13,1	-	-	-	-	-	-	-	-
150	A217 WC9 [2][3][4]	20,0	17,9	15,9	13,8	11,7	9,7	8,6	7,6	6,6	5,5	4,5	3,4	2,4	1,4	1,4 [5]	1,4 [5]	-	-	-	-	-	-	-	-
300		51,7	51,7	50,3	48,6	45,9	41,7	40,7	39,3	36,5	35,2	33,4	31,0	26,5	18,3	12,1	7,6	-	-	-	-	-	-	-	-
600		103,4	103,4	100,3	97,2	91,7	83,4	81,0	78,3	73,4	70,0	67,2	62,1	52,1	36,9	24,1	15,2	-	-	-	-	-	-	-	-
150	A217 C5 [3][4]	20,0	17,9	15,9	13,8	11,7	9,7	8,6	7,6	6,6	5,5	4,5	3,4	2,4	1,4	1,4 [5]	1,4 [5]	1,4 [5]	1,0 [5]	-	-	-	-	-	-
300		51,7	51,7	50,3	48,6	45,9	41,7	40,7	39,3	36,5	35,2	33,4	25,9	19,0	13,8	10,0	6,9	4,1	2,4	-	-	-	-	-	-
600		103,4	103,4	100,3	97,2	91,7	83,4	81,0	78,3	73,4	70,0	67,2	51,4	37,9	27,6	20,0	13,8	8,6	4,8	-	-	-	-	-	-
150	A217 C12 [3][4]	20,0	17,9	15,9	13,8	11,7	9,7	8,6	7,6	6,6	5,5	4,5	3,4	2,4	1,4	1,4 [5]	1,4 [5]	1,4 [5]	1,4 [5]	-	-	-	-	-	-
300		51,7	51,7	50,3	48,6	45,9	41,7	40,7	39,3	36,5	35,2	33,4	31,0	25,9	17,6	11,7	7,9	5,2	3,4	-	-	-	-	-	-
600		103,4	103,4	100,3	97,2	91,7	83,4	81,0	78,3	73,4	70,0	67,2	62,1	52,1	34,8	23,8	15,5	10,3	7,2	-	-	-	-	-	-
150	A352 LCB [6]	18,3	17,6	15,9	13,8	11,7	9,7	8,6	-	-	-	-	-	-	-	-	-	-	-	-	-	-	-	-	-
300		47,9	45,5	44,1	42,4	40,3	37,9	36,9	-	-	-	-	-	-	-	-	-	-	-	-	-	-	-	-	-
600		96,2	91,0	87,9	84,8	81,0	76,2	73,4	-	-	-	-	-	-	-	-	-	-	-	-	-	-	-	-	-
150	A352 LCC [6]	20,0	17,9	15,9	13,8	11,7	9,7	8,6	-	-	-	-	-	-	-	-	-	-	-	-	-	-	-	-	-
300		51,7	51,7	50,3	48,6	45,9	41,7	40,7	-	-	-	-	-	-	-	-	-	-	-	-	-	-	-	-	-
600		103,4	103,4	100,3	96,6	91,7	83,4	81,0	-	-	-	-	-	-	-	-	-	-	-	-	-	-	-	-	-
150	A351 CF8 [7]	19,0	15,9	14,1	13,1	11,7	9,7	8,6	7,6	6,6	5,5	4,5	3,4	2,4	1,4	1,4 [5]	1,4 [5]	1,4 [5]	1,4 [5]	1,4 [5]	1,4 [5]	1,4 [5]	1,4 [5]	1,4 [5]	1,0 [5]
300		49,6	41,4	37,2	34,1	32,1	30,3	29,6	29,0	28,6	27,9	27,2	26,9	26,2	24,5	22,4	17,6	14,1	11,4	9,3	7,9	6,6	5,2	4,1	2,8
600		99,3	82,7	74,1	68,6	64,1	61,0	59,6	58,3	56,9	55,8	54,5	53,8	52,7	49,0	44,8	35,5	28,3	22,8	18,3	15,5	12,8	10,3	7,9	5,9
150	A351 CF8M [7]	19,0	16,2	14,8	13,4	11,7	9,7	8,6	7,6	6,6	5,5	4,5	3,4	2,4	1,4	1,4 [5]	1,4 [5]	1,4 [5]	1,4 [5]	1,4 [5]	1,4 [5]	1,4 [5]	1,4 [5]	1,4 [5]	1,0 [5]
300		49,6	42,7	38,6	35,5	33,1	31,0	30,3	30,0	29,3	29,0	29,0	28,6	26,5	25,2	24,8	21,0	16,2	12,8	10,0	7,9	6,6	5,2	4,1	2,8
600		99,3	85,5	77,2	70,7	65,8	62,1	61,0	60,0	59,0	58,3	57,6	57,2	53,4	50,0	49,6	42,1	32,8	25,5	20,3	16,2	13,1	10,3	7,9	5,9

Table 5: Permissible operating pressure [psi] (to ASME B16.34)

Class	Material	[°F]																							
		-20 to 100	200	300	400	500	600	650	700	750	800	850	900	950	1000	1050	1100	1150	1200	1250	1300	1350	1400	1450	1500
150	A216 WCB [1]	285	260	230	200	170	140	125	110	95	80	65	50	35	20	-	-	-	-	-	-	-	-	-	-
300		740	680	655	635	605	570	550	530	505	410	320	230	135	85	-	-	-	-	-	-	-	-	-	-
600		1480	1360	1310	1265	1205	1135	1100	1060	1015	825	640	460	275	170	-	-	-	-	-	-	-	-	-	-
150	A217 WC6 [2][3][4]	290	260	230	200	170	140	125	110	95	80	65	50	35	20	20 [5]	20 [5]	-	-	-	-	-	-	-	-
300		750	750	720	695	665	605	590	570	530	510	485	450	320	215	145	95	-	-	-	-	-	-	-	-
600		1500	1500	1445	1385	1330	1210	1175	1135	1065	1015	975	900	640	430	290	190	-	-	-	-	-	-	-	-
150	A217 WC9 [2][3][4]	290	260	230	200	170	140	125	110	95	80	65	50	35	20	20 [5]	20 [5]	-	-	-	-	-	-	-	-
300		750	750	730	705	665	605	590	570	530	510	485	450	385	265	175	110	-	-	-	-	-	-	-	-
600		1500	1500	1455	1410	1330	1210	1175	1135	1065	1015	975	900	755	535	350	220	-	-	-	-	-	-	-	-
150	A217 C5 [3][4]	290	260	230	200	170	140	125	110	95	80	65	50	35	20	20 [5]	20 [5]	20 [5]	15 [5]	-	-	-	-	-	-
300		750	750	730	705	665	605	590	570	530	510	485	375	275	200	145	100	60	35	-	-	-	-	-	-
600		1500	1500	1455	1410	1330	1210	1175	1135	1065	1015	975	745	550	400	290	200	125	70	-	-	-	-	-	-
150	A217 C12 [3][4]	290	260	230	200	170	140	125	110	95	80	65	50	35	20	20 [5]	20 [5]	20 [5]	20 [5]	-	-	-	-	-	-
300		750	750	730	705	665	605	590	570	530	510	485	450	375	255	170	115	75	50	-	-	-	-	-	-
600		1500	1500	1455	1410	1330	1210	1175	1135	1065	1015	975	900	755	505	345	225	150	105	-	-	-	-	-	-
150	A352 LCB [6]	265	255	230	200	170	140	125	-	-	-	-	-	-	-	-	-	-	-	-	-	-	-	-	-
300		695	660	640	615	585	550	535	-	-	-	-	-	-	-	-	-	-	-	-	-	-	-	-	-
600		1395	1320	1275	1230	1175	1105	1065	-	-	-	-	-	-	-	-	-	-	-	-	-	-	-	-	-
150	A352 LCC [6]	290	260	230	200	170	140	125	-	-	-	-	-	-	-	-	-	-	-	-	-	-	-	-	-
300		750	750	730	705	665	605	590	-	-	-	-	-	-	-	-	-	-	-	-	-	-	-	-	-
600		1500	1500	1455	1405	1330	1210	1175	-	-	-	-	-	-	-	-	-	-	-	-	-	-	-	-	-
150	A351 CF8 [7]	275	230	205	190	170	140	125	110	95	80	65	50	35	20	20 [5]	20 [5]	20 [5]	20 [5]	20 [5]	20 [5]	20 [5]	20 [5]	20 [5]	15 [5]

1 Permissible but not recommended for prolonged use above 427 °C (800 °F).
2 Cannot be used for temperatures above 593 °C (1100 °F).
3 Use normalised and tempered material only.
4 The deliberate addition of any element not listed in ASTM A217, table 1, is prohibited. Exception: Ca or Mn may be added for deoxidation.
5 For butt weld end valves only. Flanged end ratings terminate at 538 °C (1000 °F).
6 Cannot be used for temperatures above 343 °C (650 °F).
7 At temperatures over 538 °C (1000 °F), use only when carbon content is 0.04 % or higher.

7362.11/08-EN

Class	Material	[°F]																							
		-20 to 100	200	300	400	500	600	650	700	750	800	850	900	950	1000	1050	1100	1150	1200	1250	1300	1350	1400	1450	1500
300	A351 CF8 [7]	720	600	540	495	465	440	430	420	415	405	395	390	380	355	325	255	205	165	135	115	95	75	60	40
600		1440	1200	1075	995	930	885	865	845	825	810	790	780	765	710	650	515	410	330	265	225	185	150	115	85
150	A351 CF8M [7]	275	235	215	195	170	140	125	110	95	80	65	50	35	20	20 [5]	20 [5]	20 [5]	20 [5]	20 [5]	20 [5]	20 [5]	20 [5]	20 [5]	15 [5]
300		720	620	560	515	480	450	440	435	425	420	420	415	385	365	360	305	235	185	145	115	95	75	60	40
600		1440	1240	1120	1025	955	900	885	870	855	845	835	830	775	725	720	610	475	370	295	235	190	150	115	85

Table 6: Test pressure

Test	Test fluid	Class 150		Class 300		Class 600	
		[bar]	[psi]	[bar]	[psi]	[bar]	[psi]
Shell	Water	32	450	78	1125	153	2225
Back seat tightness test		23	315	56	815	112	1630
Seat tightness test [8][9]		23	315	56	815	112	1630
Seat tightness test	Air	4-7	60-100	4-7	60-100	4-7	60-100

8 Seat tightness test with water is optional, only performed if specified by purchaser.

9 The test pressure applied corresponds to the permissible differential pressure if the differential pressure is lower than the full rated pressure (see Installation information). It must be approved by the customer in advance.

Materials

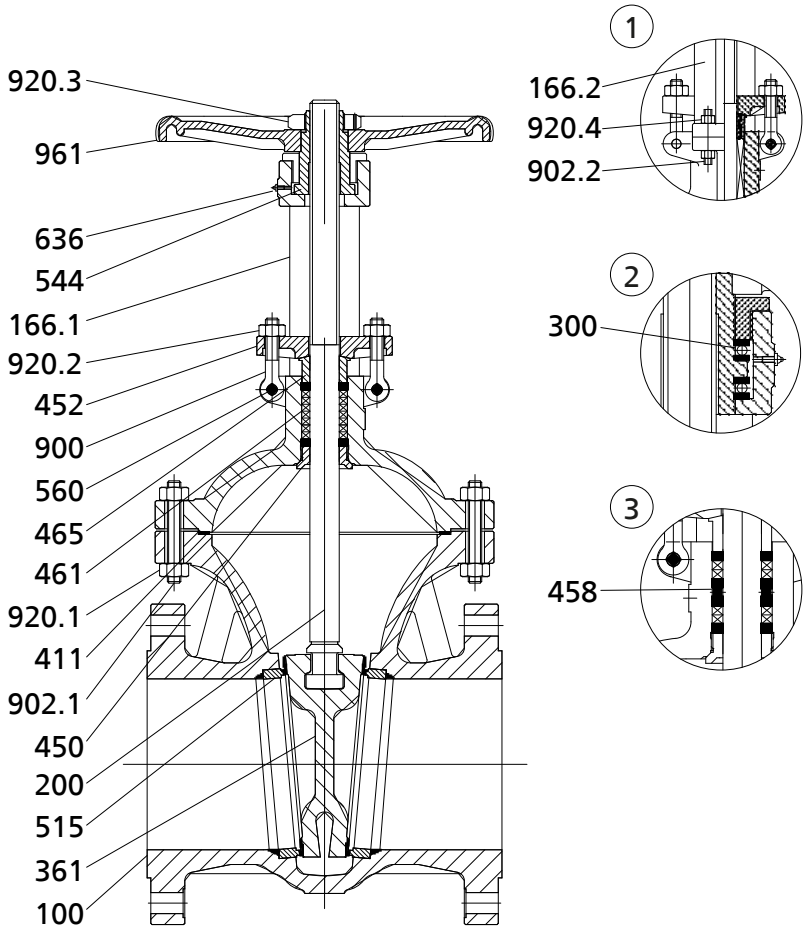

Fig. 1: Sectional drawing① Yoke (14 to 24-inch valves, Class 150, 14 to 24-inch valves, Class 300) ② Bearing (6 to 24-inch valves, Class 600) ③ Lantern ring (optional)

Table 7: Parts list

Part No.	Description	Material								
		A216 WCB	A217 WC6	A217 WC9	A217 C5	A217 C12	A352 LCB	A352 LCC	A351 CF8	A351 CF8M
100	Body	A216 WCB	A217 WC6	A217 WC9	A217 C5	A217 C12	A352 LCB	A352 LCC	A351 CF8	A351 CF8M
166.1	Yoke	A216 WCB	A217 WC6	A217 WC9	A217 C5	A217 C12	A352 LCB	A352 LCC	A351 CF8	A351 CF8M
166.2	Yoke	A216 WCB	A217 WC6	A217 WC9	A217 C5	A217 C12	A352 LCB	A352 LCC	A351 CF8	A351 CF8M
361	Flexible wedge	A216 WCB	A217 WC6	A217 WC9	A217 C5	A217 C12	A352 LCB	A352 LCC	A351 CF8	A351 CF8M
515	Seat ring	A105	A182 F11	A182 F22	A182 F5	A182 F9	A182 LF2	A350 LF2	A182 F304	A182 F316
200	Stem	See "Trim materials" table								
450	Back seat bush	See "Trim materials" table								
452	Gland follower	A216 WCB	A217 WC6	A217 WC6	A217 WC6	A217 WC6	A216 WCB	A216 WCB	A351 CF8	A351 CF8
544	Threaded bush	A439 D-2	A439 D-2	A439 D-2	A439 D-2	A439 D-2	A439 D-2	A439 D-2	A439 D-2	A439 D-2
902.1	Stud	A193 B7	A193 B16	A193 B16	A193 B16	A193 B16	A320 L7	A320 L7	A193 B8	A193 B8
920.1	Nut	A194 2 H	A194 Gr. 7	A194 Gr. 7	A194 Gr. 7	A194 Gr. 7	A194 Gr. 7	A194 Gr. 7	A194 Gr. 8	A194 Gr. 8
461	Gland packing	Graphite								
411	Joint ring	Graphite + stainless steel							Graphite + stainless steel	
900	Eyebolt	A307 B	A193 B16	A193 B16	A193 B16	A193 B16	A320 L7	A320 L7	A193 B8	A193 B8
920.2	Nut	A194 2 H	A194 Gr. 7	A194 Gr. 7	A194 Gr. 7	A194 Gr. 7	A194 Gr. 7	A194 Gr. 7	A194 Gr. 8	A194 Gr. 8
560	Pin	Carbon steel							Stainless steel	
961	Handwheel	Nodular cast iron or malleable cast iron								
920.3	Handwheel nut	Carbon steel							Stainless steel	
300	Bearing	Steel								
458	Lantern ring	13Cr	13Cr	13Cr	13Cr	13Cr	304	304	304	316

7362.11/08-EN

Part No.	Description	Material								
		A216 WCB	A217 WC6	A217 WC9	A217 C5	A217 C12	A352 LCB	A352 LCC	A351 CF8	A351 CF8M
636	Lubricating nipple	Steel							Stainless steel	
902.2	Stud	A193 B7	A193 B16	A193 B16	A193 B16	A193 B16	A320 L7	A320 L7	A193 B8	A193 B8
920.4	Nut	A194 2 H	A194 Gr. 7	A194 Gr. 7	A194 Gr. 7	A194 Gr. 7	A194 Gr. 7	A194 Gr. 7	A194 Gr. 8	A194 Gr. 8

Table 8: Trim materials

Part No.	Description	Trim 1	Trim 2	Trim 5	Trim 8	Trim 10
		13 % chrome steel (Cr) / 13 % chrome steel (Cr)	304 / 304	Stellite / Stellite	Stellite / 13 % chrome steel (Cr)	316 / 316
361	Flexible wedge [10]	13 % chrome steel (Cr)	Stainless steel 304	Stellite	13 % chrome steel (Cr)	Stainless steel 316
515	Seat ring [10]	13 % chrome steel (Cr)	Stainless steel 304	Stellite	Stellite	Stainless steel 316
200	Stem	13 % chrome steel (Cr)	Stainless steel 304	13 % chrome steel (Cr)	13 % chrome steel (Cr)	Stainless steel 316
450	Back seat bush	13 % chrome steel (Cr)	Stainless steel 304	13 % chrome steel (Cr)	13 % chrome steel (Cr)	Stainless steel 316
465	Lower gland section	13 % chrome steel (Cr)	Stainless steel 304	13 % chrome steel (Cr)	13 % chrome steel (Cr)	Stainless steel 316

Variants

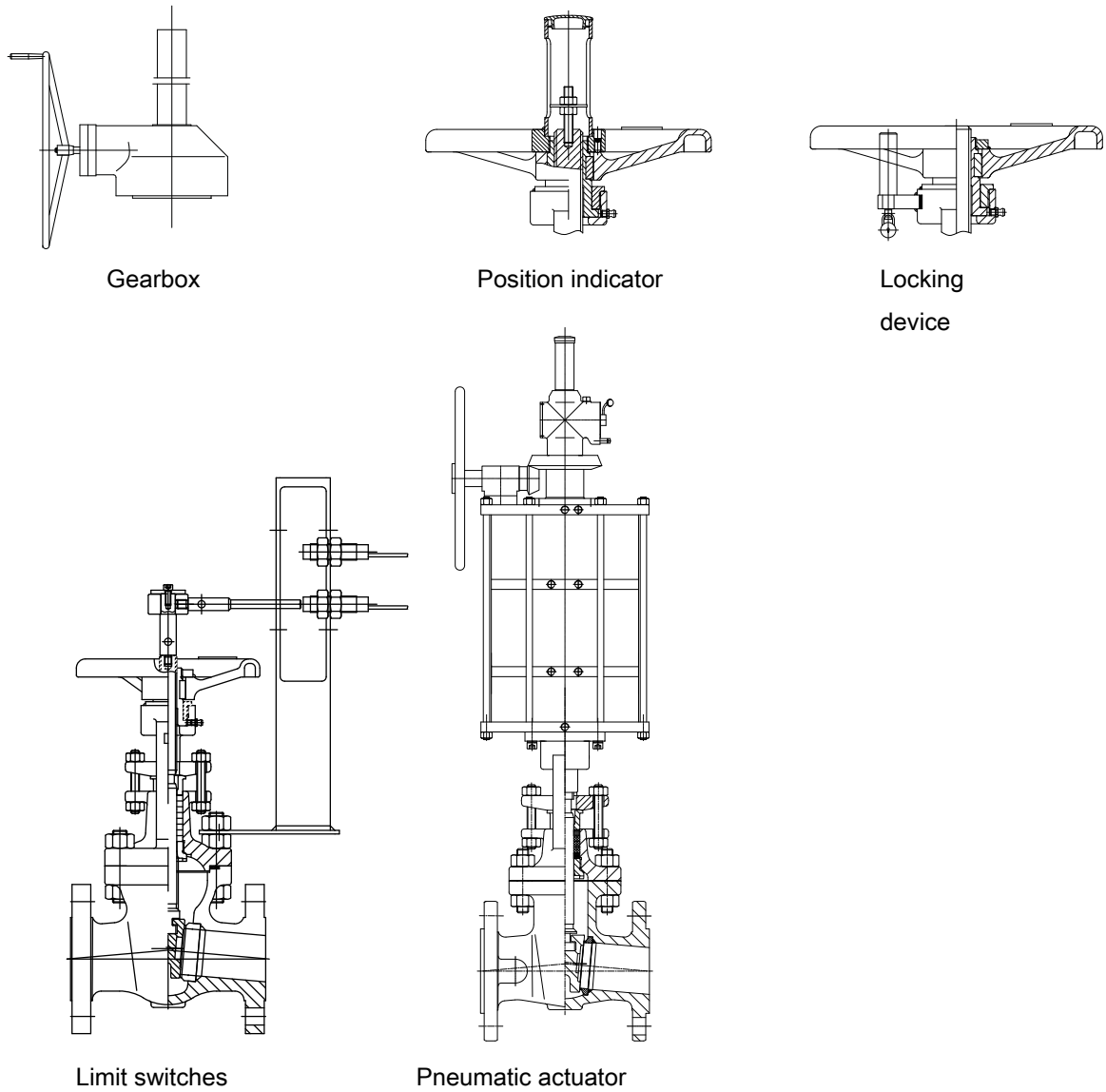

Fig. 2: Sectional drawings

10 The trim material indicated for the flexible wedge and seat ring refers to the seating surfaces, not to the base material.

Dimensions and weights

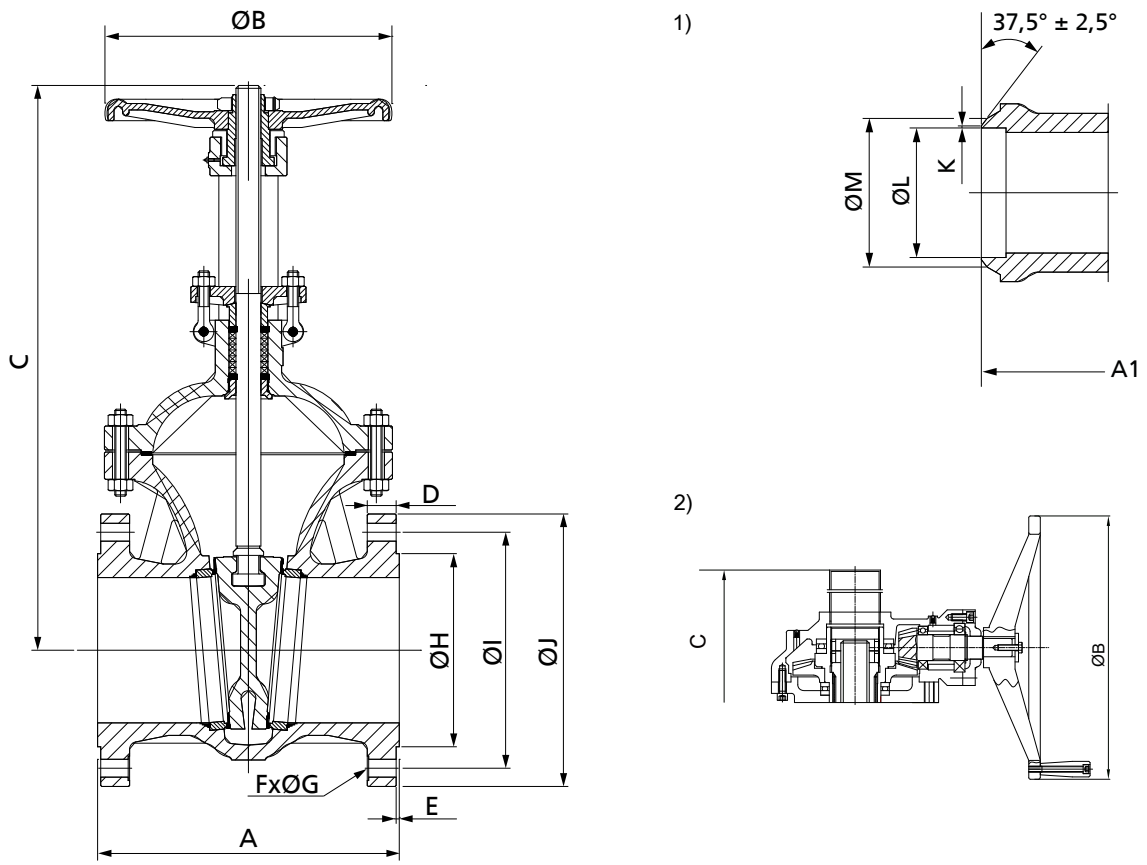

Fig. 3: Dimensions; 1) Butt weld ends; 2) Actuator

Table 9: Dimensions and weights

Class	NPS	A	A1	ØB	C [11]	C[12]	D	E	F	ØG	ØH	ØI	ØJ	
	[inch]	[mm]	[mm]	[mm]	[mm]	[mm]	[mm]	[mm]	[mm]	[mm]	[mm]	[mm]	[mm]	[kg]
150	2	178	216	203	372	312	14,3	2	4	19,1	92,1	120,7	150	15
	2 1/2	190	241	203	439	356	15,9	2	4	19,1	104,8	139,7	180	23
	3	203	282	254	433	352	17,5	2	4	19,1	127,0	152,4	190	25
	4	229	305	254	510	406	22,3	2	8	19,1	157,2	190,5	230	40
	5	254	381	356	705	559	22,3	2	8	22,4	185,7	215,9	255	57
	6	267	403	356	730	570	23,9	2	8	22,4	215,9	241,3	280	70
	8	292	419	356	933	718	27,0	2	8	22,4	269,9	298,5	345	125
	10	330	457	457	1158	894	28,6	2	12	25,4	323,8	362,0	405	200
	12	356	502	508	1395	1074	30,2	2	12	25,4	381,0	431,8	485	280
	14	381	572	508	1657	1295	33,4	2	12	28,4	412,8	476,3	535	430
	16	406	610	610	1908	1486	35,0	2	16	28,4	469,9	539,8	595	585
	18	432	660	700	2051	1583	38,1	2	16	31,8	533,4	577,9	635	710
	20	457	711	800	2260	1748	41,3	2	20	31,8	584,2	635,0	700	860
	24	508	813	800	2669	2051	46,1	2	20	35,1	692,2	749,3	815	1260
300	2	216	216	203	394	336	20,7	2	8	19,1	92,1	127,0	165	28
	2 1/2	241	241	254	465	385	23,9	2	8	22,4	104,8	149,2	190	45
	3	282	282	254	496	408	27,0	2	8	22,4	127,0	168,3	210	45
	4	305	305	254	618	502	30,2	2	8	22,4	157,2	200,0	255	65
	5	381	381	356	720	576	33,4	2	8	22,0	185,7	235,0	280	101
	6	403	403	356	831	665	35,0	2	12	22,4	215,9	269,9	320	135
	8	419	419	457	1022	797	39,7	2	12	25,4	269,9	330,2	380	220
	10	457	457	508	1237	970	46,1	2	16	28,4	323,8	387,4	445	375

11 Open
12 Closed

7362.11/08-EN

Class	NPS	A	A1	ØB	C [11]	C[12]	D	E	F	ØG	ØH	ØI	ØJ	
	[inch]	[mm]	[mm]	[mm]	[mm]	[mm]	[mm]	[mm]	[mm]	[mm]	[mm]	[mm]	[mm]	[kg]
300	12	502	502	508	1427	1104	49,3	2	16	31,8	381,0	450,8	520	470
	14	762	762	610	1738	1366	52,4	2	20	31,8	412,8	514,4	585	855
	16	838	838	700	1920	1493	55,6	2	20	35,1	469,9	571,5	650	1110
	18 [13]	914	914	610		2136	58,8	2	24	35,1	533,4	628,6	710	1435
	20 [13]	991	991	610		2290	62,0	2	24	35,1	584,2	685,8	775	1810
	24 [13]	1143	1143	710		2880	68,3	2	24	41,1	692,2	812,8	915	2480
600	2	292	292	203	428	362	25,4	7	8	19,1	92,1	127,0	165	32
	2 1/2	330	330	254	475	395	28,6	7	8	22,4	104,8	149,4	190	55
	3	356	356	254	526	436	31,8	7	8	22,4	127,0	168,3	210	60
	4	432	432	356	641	528	38,1	7	8	25,4	157,2	215,9	275	105
	5	508	508	356	735	595	44,5	7	8	28,0	185,7	266,7	330	165
	6	559	559	508	884	714	47,7	7	12	28,4	215,9	292,1	355	210
	8	660	660	508	1060	842	55,6	7	12	31,8	269,9	349,2	420	365
	10	787	787	508	1246	985	63,5	7	16	35,1	323,8	431,8	510	600
	12	838	838	610	1546	1218	66,7	7	20	35,1	381,0	489,0	560	820
	14 [13]	889	889	610		1840	69,9	7	20	38,1	412,8	527,1	605	1430
	16 [13]	991	991	610		2020	76,2	7	20	41,1	469,9	603,3	685	1783
	18 [13]	1092	1092	800		2300	82,6	7	20	44,5	533,4	654,1	745	2272

Table 10: Butt weld end dimensions [mm]

NPS	Pipe OD	K	ØM	ØL for various pipe schedules												
				10	20	30	40	60	80	100	120	140	160	STD	XS	XXS
[inch]	[mm]	[mm]	[mm]	[mm]	[mm]	[mm]	[mm]	[mm]	[mm]	[mm]	[mm]	[mm]	[mm]	[mm]	[mm]	[mm]
2	60,30	1,6 ±0,8	60,30	54,79	-	-	52,51	-	49,25	-	-	-	42,85	Sch 40	Sch 80	38,19
2 1/2	73,03	1,6 ±0,8	75,2	66,93	-	-	62,71	-	59,00	-	-	-	53,98	Sch 40	Sch 80	44,98
3	88,90	1,6 ±0,8	91,2	82,80	-	-	77,93	-	73,66	-	-	-	66,65	Sch 40	Sch 80	58,42
4	114,30	1,6 ±0,8	117,3	108,20	-	-	102,26	-	97,18	-	92,05	-	87,07	Sch 40	Sch 80	80,06
5	-	1,6 ±0,8	141,3	-	-	-	128,2	-	122,24	-	115,9	-	109,54	-	-	107,06
6	168,28	1,6 ±0,8	172,2	161,47	-	-	154,05	-	146,33	-	139,73	-	131,75	-	-	-
8	219,08	1,6 ±0,8	223,0	211,56	206,38	-	202,72	198,45	193,68	188,90	182,55	177,83	173,05	Sch 40	Sch 80	174,63
10	273,05	1,6 ±0,8	277,9	264,67	260,35	-	254,51	247,65	242,87	236,52	230,17	222,25	215,90	Sch 40	Sch 60	Sch 140
12	323,85	1,6 ±0,8	329,4	314,71	311,15	-	303,23	295,30	288,90	280,97	273,05	266,70	257,20	304,80	298,45	Sch 120
14	355,60	1,6 ±0,8	362,0	342,90	339,75	336,55	333,35	325,42	317,50	307,95	300,02	292,10	284,18	Sch 30	330,20	-
16	406,40	1,6 ±0,8	412,8	393,70	390,55	387,35	381,00	373,08	363,52	354,03	344,47	333,35	325,42	Sch 30	Sch 40	-
18	457,20	1,6 ±0,8	464,3	444,50	441,35	-	428,65	419,10	409,55	398,48	387,35	377,85	366,73	438,15	431,80	-
20	508,00	1,6 ±0,8	515,9	495,30	488,95	482,60	477,82	466,75	455,63	442,93	431,80	419,10	407,97	Sch 20	Sch 30	-
24	609,60	1,6 ±0,8	619,3	596,90	590,55	581,05	574,65	560,37	547,67	531,83	517,55	504,85	490,52	Sch 20	584,20	-

Mating dimensions as per standard

Face-to-face lengths:	ASME B16.10
Flanges (2 - 24 inches):	ASME B16.5
Butt weld ends:	ASME B16.25

Installation information

Flow may pass a gate valve in either direction. High-pressure valves with pressure relief arrangement are unidirectional, however.

Table 11: Differential pressures with standard valve disc

Class	NPS	Hand-wheel[14]	Handwheel	Gearbox[15]
	[inch]	[mm]	Δp [bar] (psi)	
150	2	203	20 (290)	20 (290)
	2 1/2	203		
150	3	254	20 (290)	20 (290)
	4	254		
	5	356		
	6	356		
	8	356		
	10	457		
	12	508		
	14	508		
	16	610	19 (274)	
	18	700	15 (220)	
	20	800	12 (173)	
	24	800	7 (100)	

13 With manual gearbox as standard. Values for B and C changed accordingly.

Class	NPS	Hand-wheel[14]	Handwheel	Gearbox[15]
	[inch]	[mm]	Δp [bar] (psi)	
300	2	203	52 (750)	52 (750)
	2 1/2	254		
	3	254		
	4	254		
	5	356		
	6	356		
	8	457		
	10	508	43 (537)	
	12	508	28 (409)	
	14	610	24 (350)	
	16	700	18 (267)	
	18	800	14 (209)	
	20	800	10 (144)	
	24	800	6 (83)	
600	2	203	103 (1500)	103 (1500)
	2 1/2	254		
	3	254		
	4	356		
	5	508		
	6	508	101 (1463)	
	8	508	57 (827)	
	10	508	31 (447)	
	12	610	23 (335)	
	14	800	16 (234)	
	16	800	11 (154)	
	18	-	-	

- The above ΔP shut-off pressures are the values permitted in the installation for different actuation methods.
- Seat test pressure shall be 1.1 times the above value.
- Select the options based on the shut-off pressure specified by the customer.
- If the value of ΔP selected from the table is less than the maximum working pressure as per ANSI B16.34, the shut-off pressure selected and the corresponding seat test pressure (1.1 times the selected value) must be approved by the customer to avoid confusion during third-party inspection.

7362.11/08-EN

14 Handwheel diameters not applicable for valves with manual gearboxes
15 For the suitable gearbox model contact the TSS engineer of the KSB company.

2023-09-07

7362.11/08-EN

KSB SE & Co. KGaA
Johann-Klein-Straße 9 • 67227 Frankenthal (Germany)
Tel. +49 6233 86-0
www.ksb.com