MANUAL DE INSTALACIÓN

CABINA DUCHA CUADRADA 80X80X200

10017

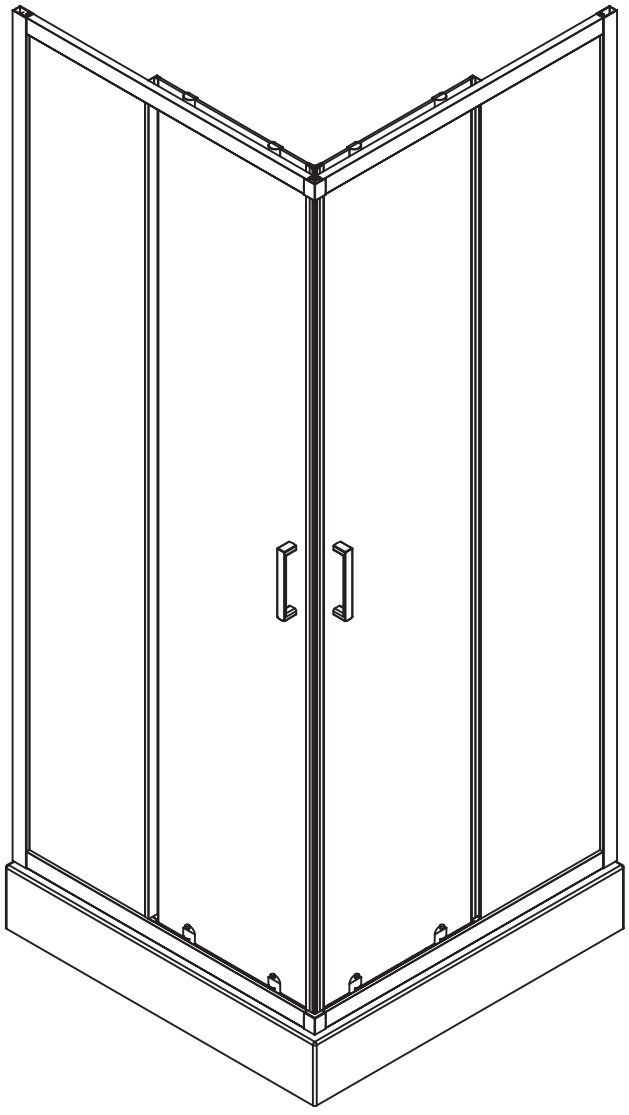

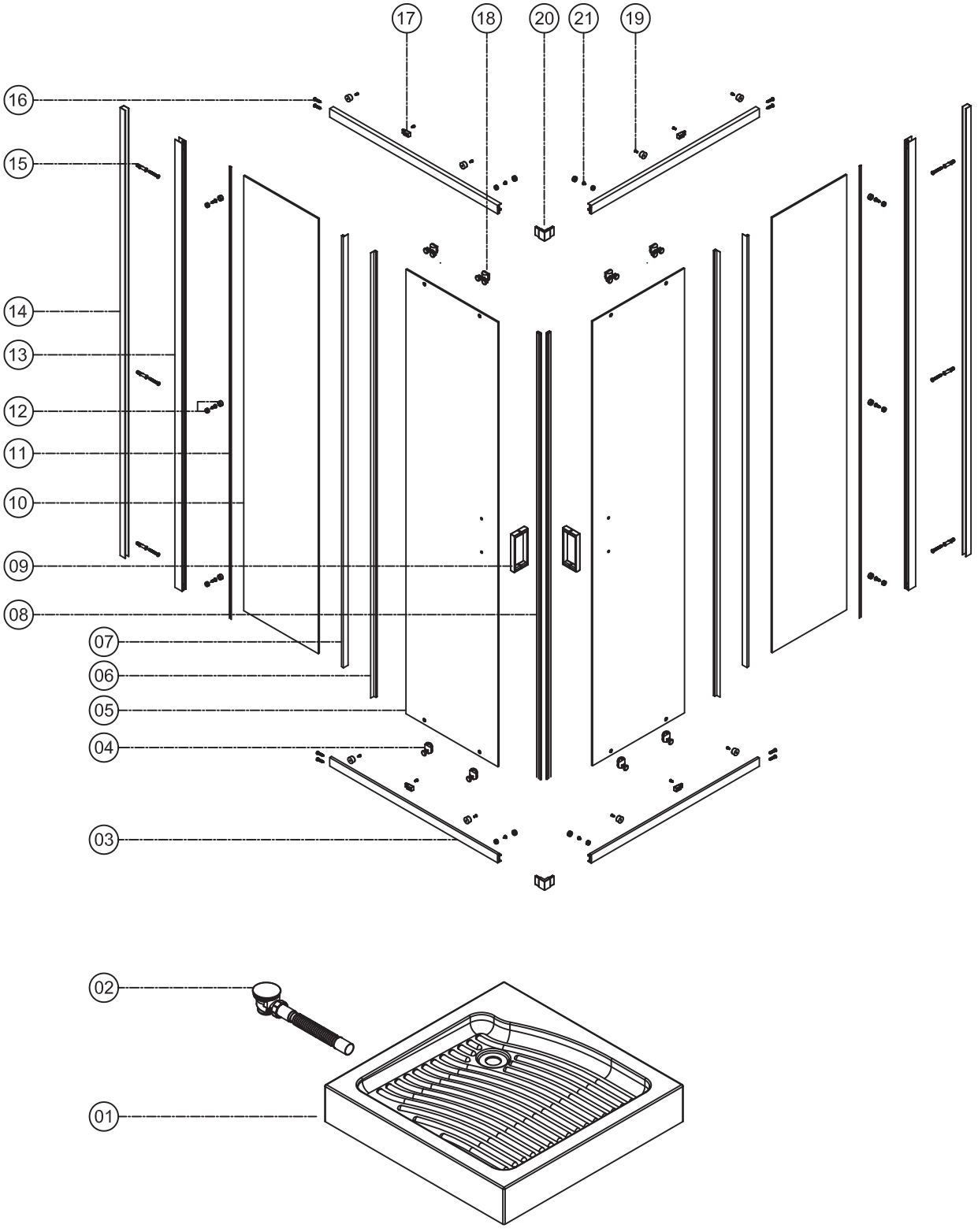
17
18
20
21
19
16
15
14
13
12
11
10
09
08
07
06
05
04
03
02
01

01 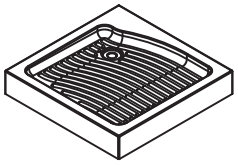 x1	02 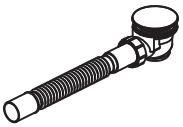 x1	03 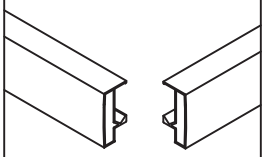 x2	04 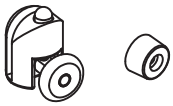 x4	05 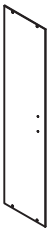 x2	06 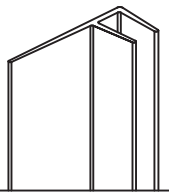 x2
07 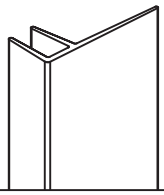 x2	08 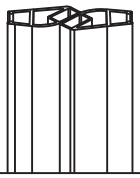 x1	09  x2	10  x2	11  x2	12 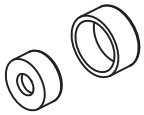 x10
13 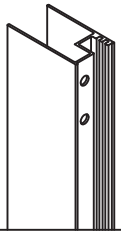 x2	14 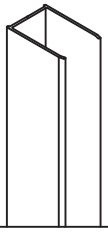 x2	15 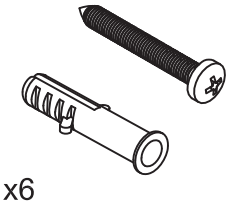 x6	16 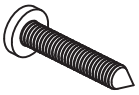 x8	17 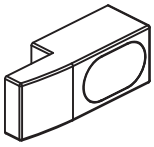 x4	18 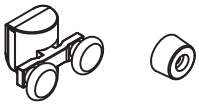 x4
19  x18	20 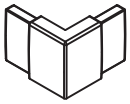 x2	21  x4			

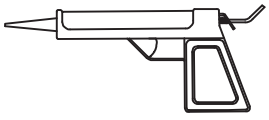


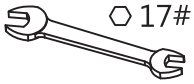

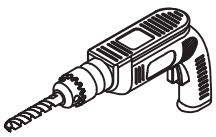
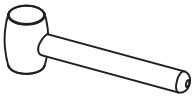
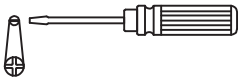

Ø2.8mm
Ø6mm

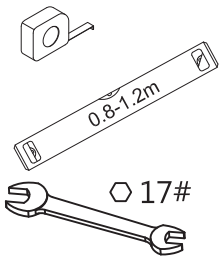

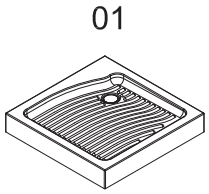

x1

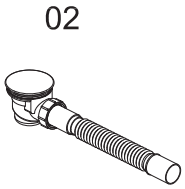

x1

1

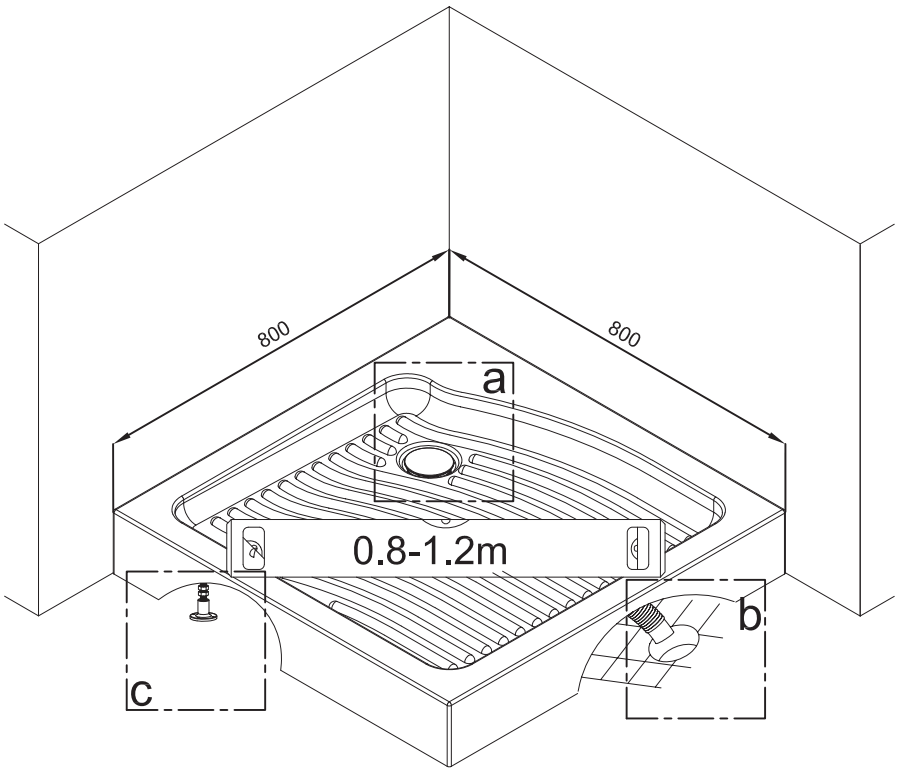

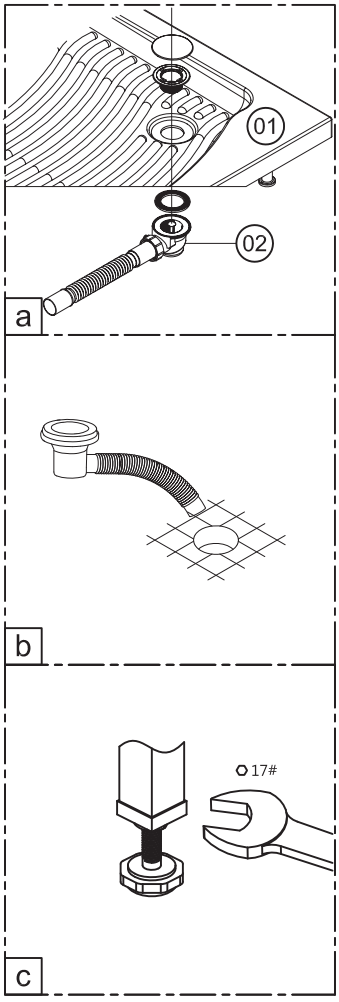

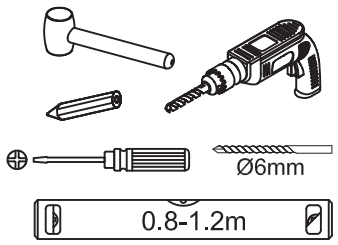
Ø6mm
0.8-1.2m

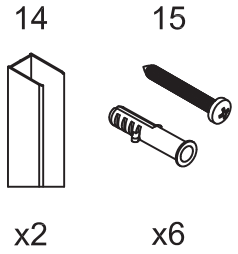
14
15
x2
x6

2

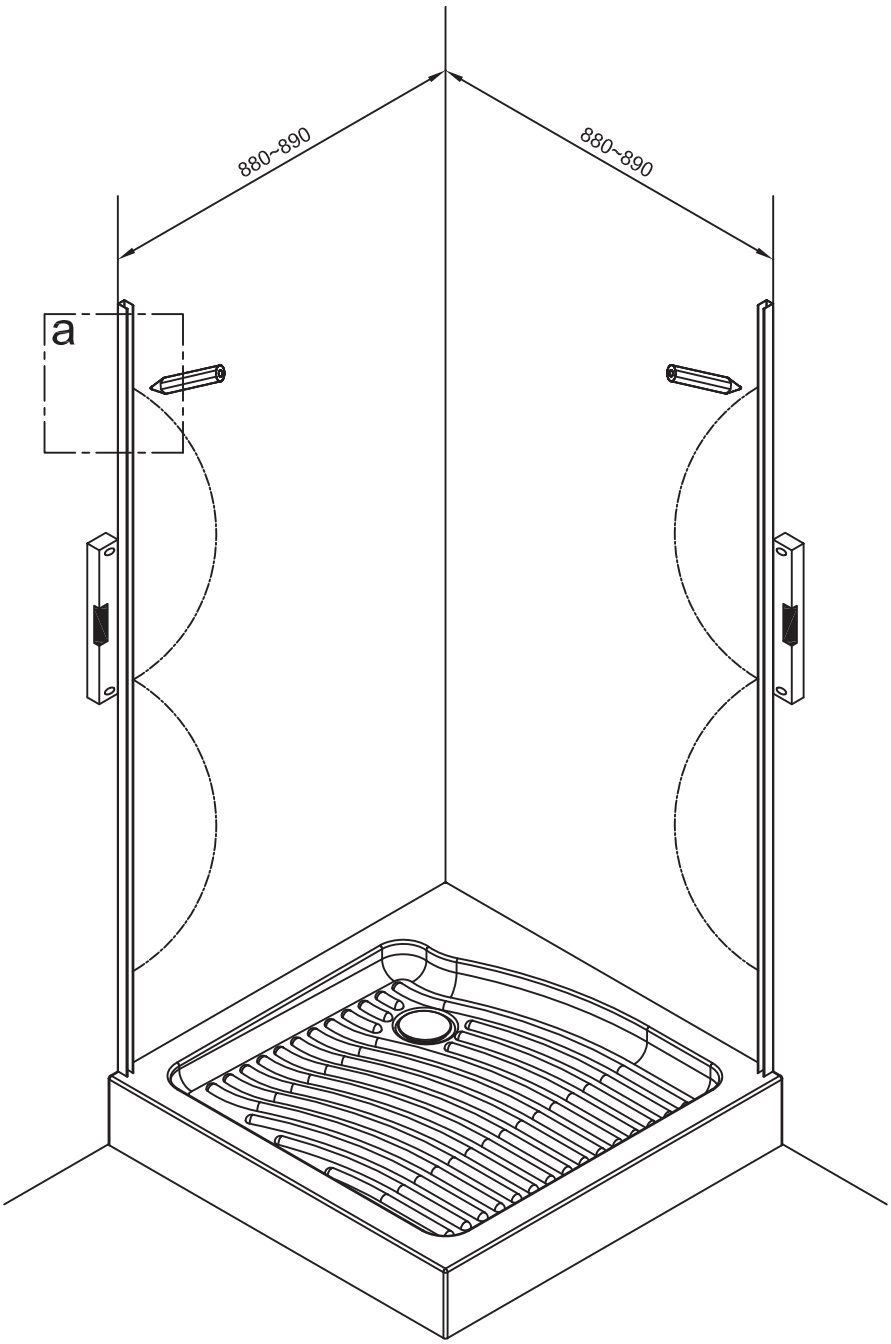
880~890
880~890
a

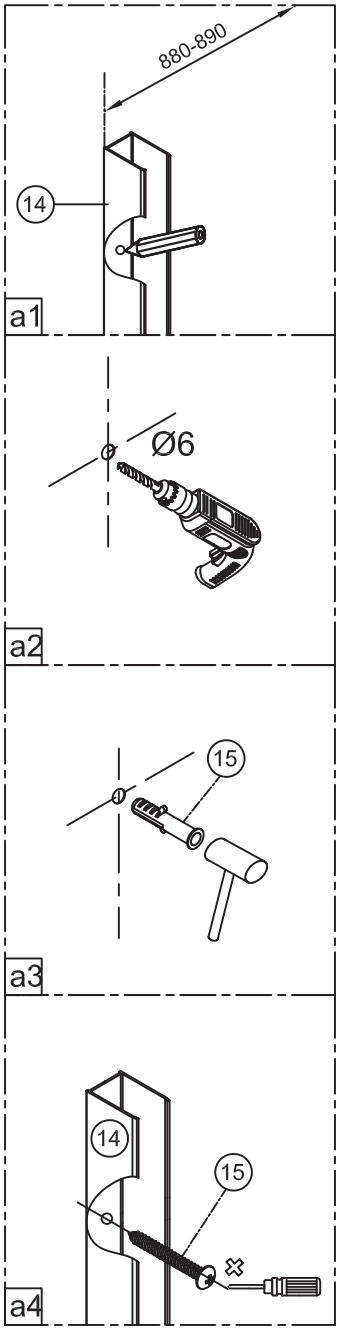
880-890
14
a1
Ø6
a2
15
a3
14
15
a4

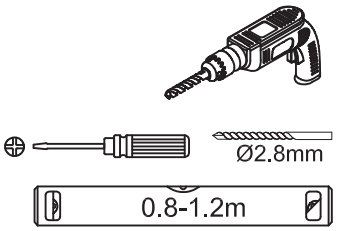
Ø2.8mm
0.8-1.2m

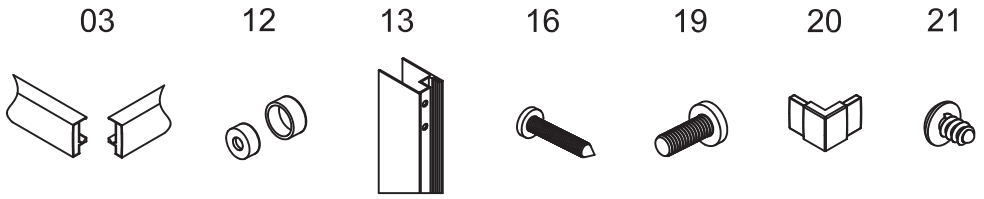
03
12
13
16
19
20
21
x2
x10
x2
x8
x6
x2
x4

3

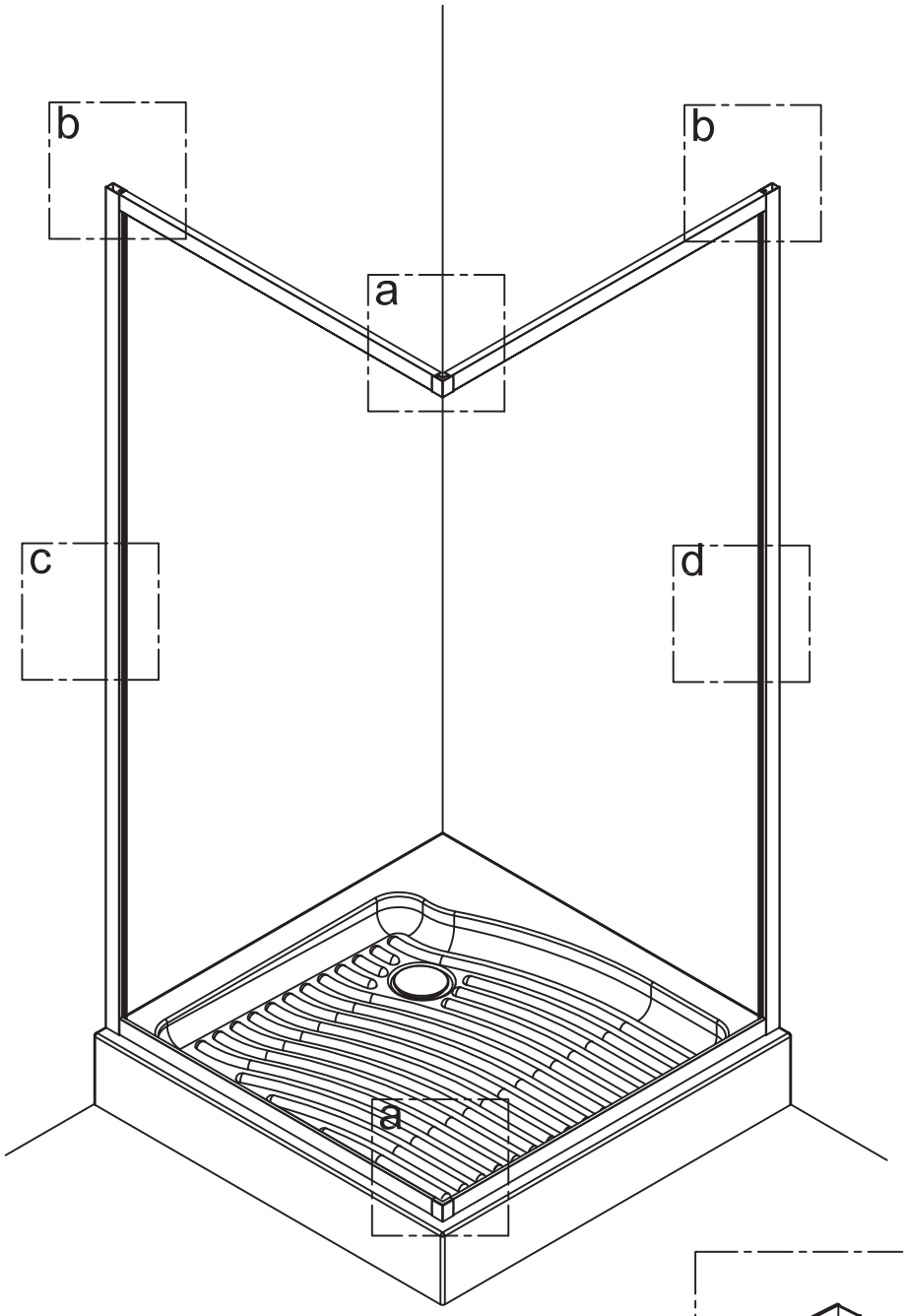
b
b
a
c
d
a

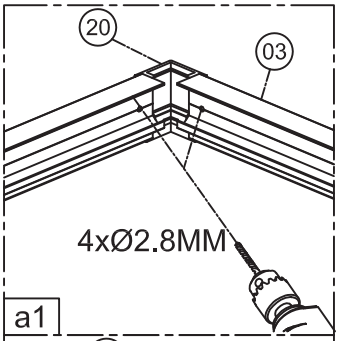
20
03
4xØ2.8MM
a1

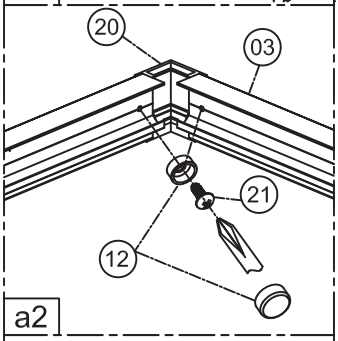
20
03
21
12
a2

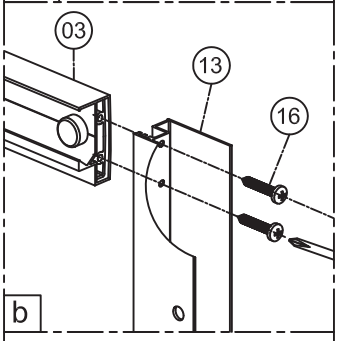
03
13
16
b

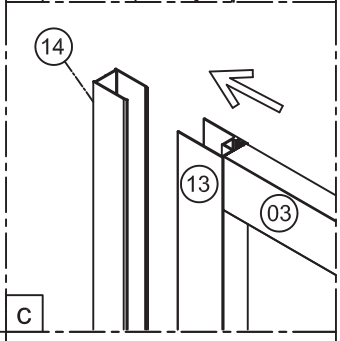
14
13
03
c

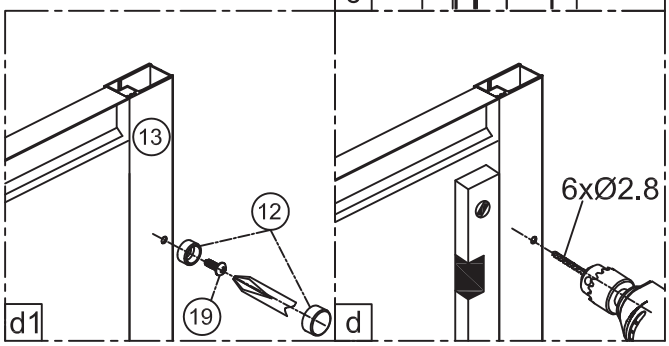
13
12
19
d1
6xØ2.8
d

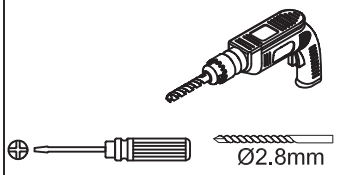

07	10	11	17	19
x2	x2	x2	x4	x4

4

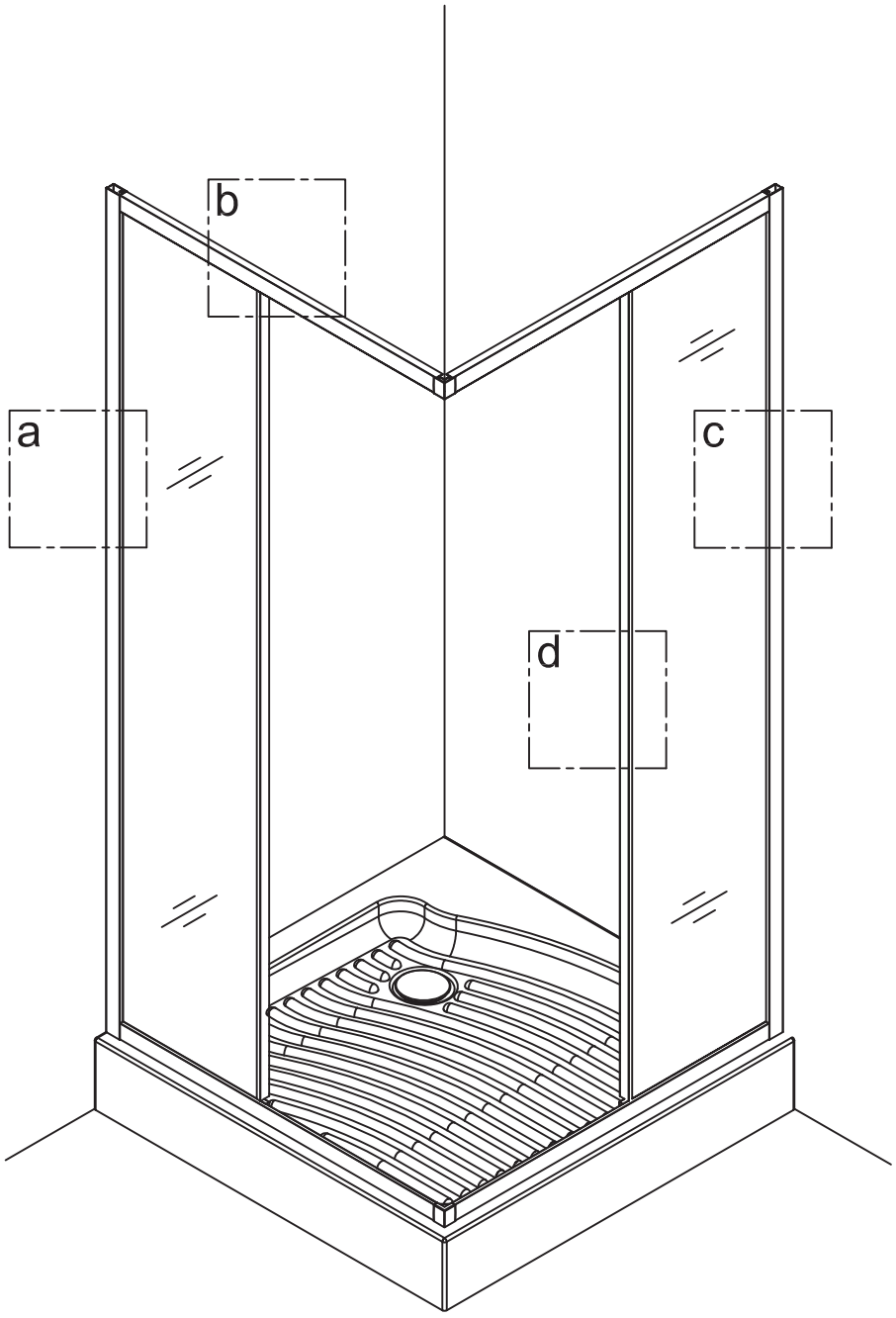

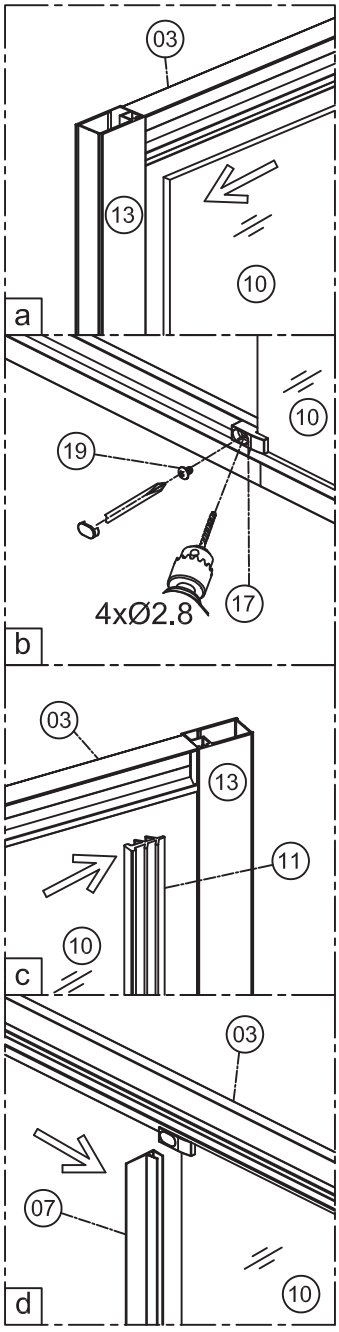

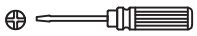

04	05	06	08	09	18
x4	x2	x2	x1	x2	x4

5

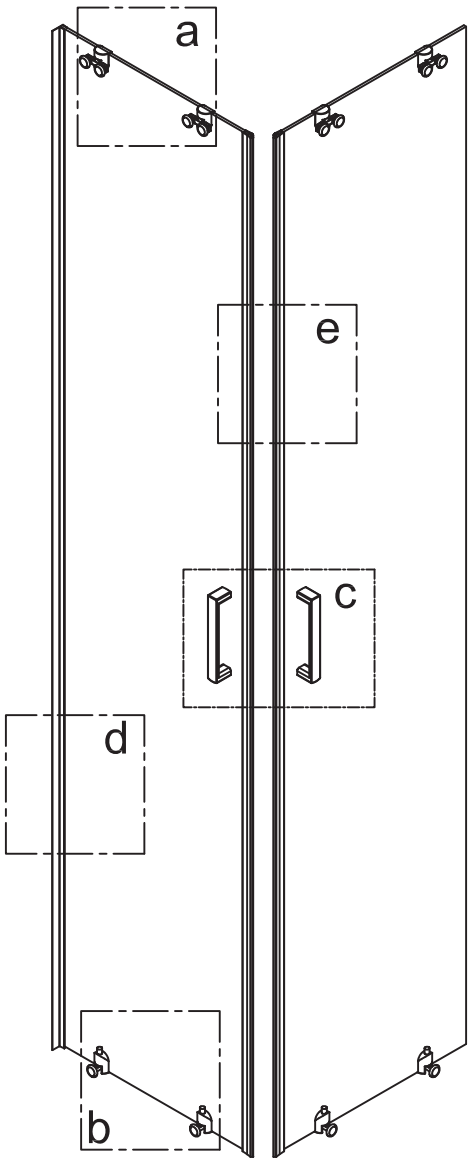

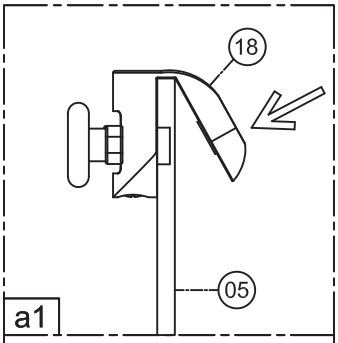

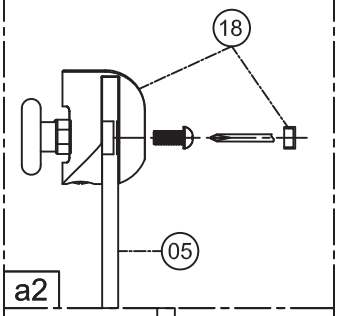

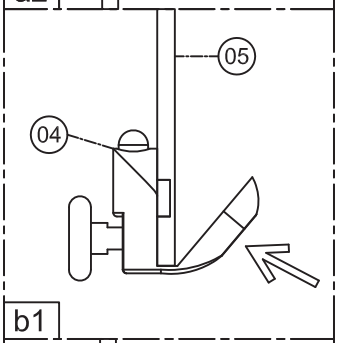

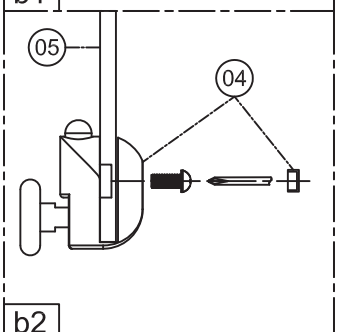

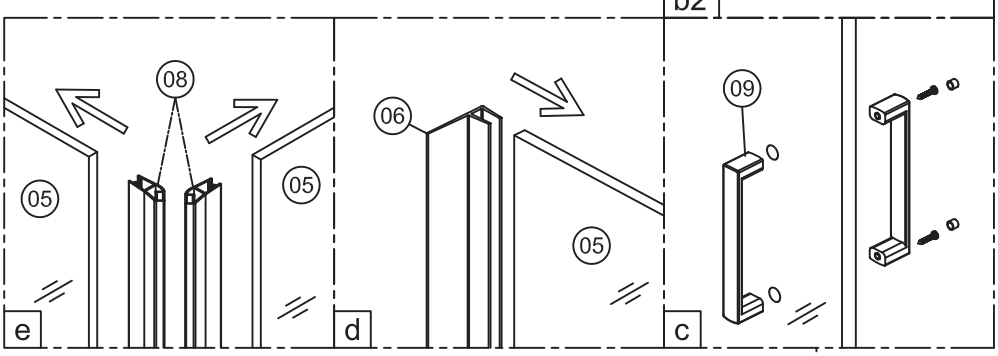

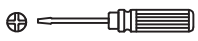

6

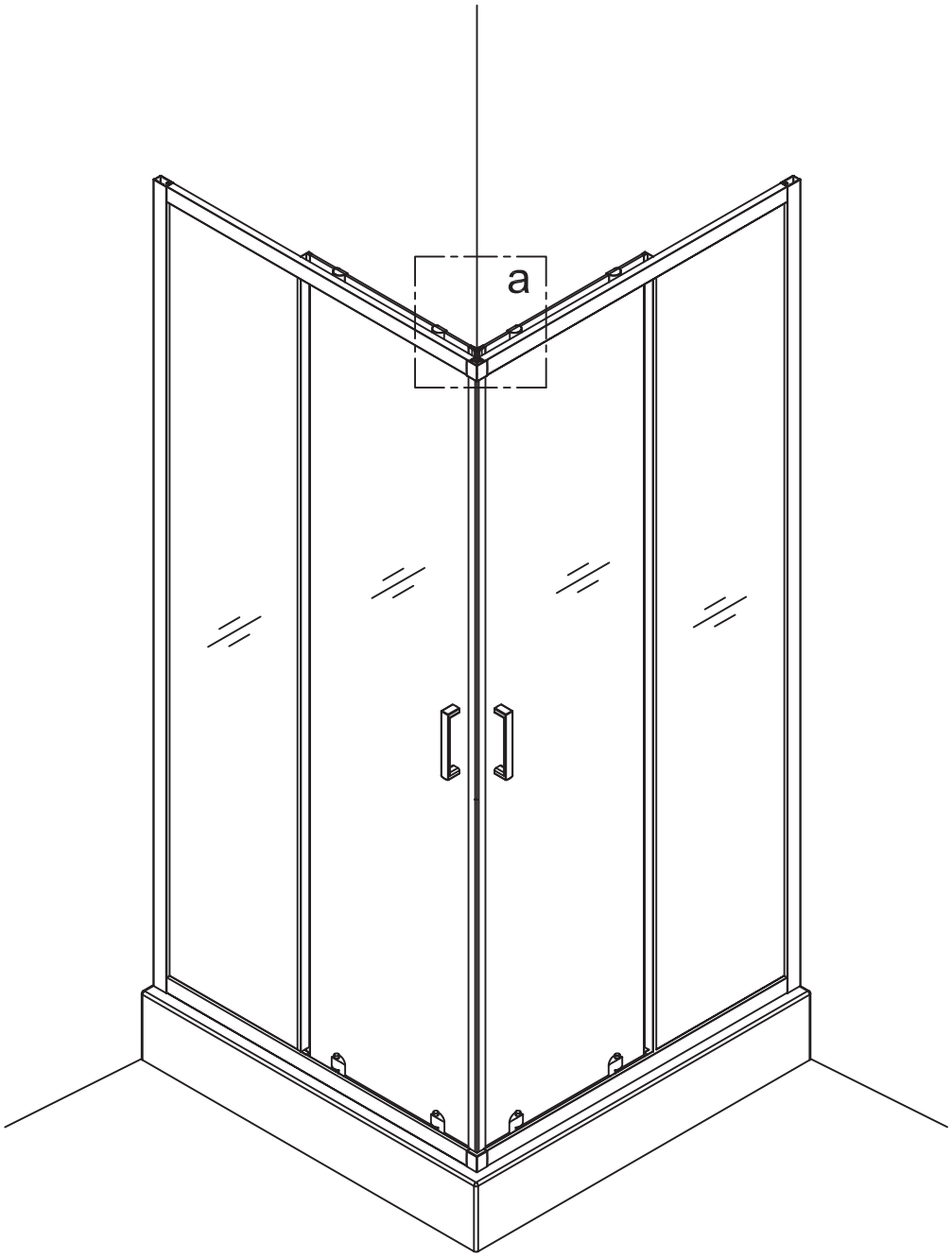

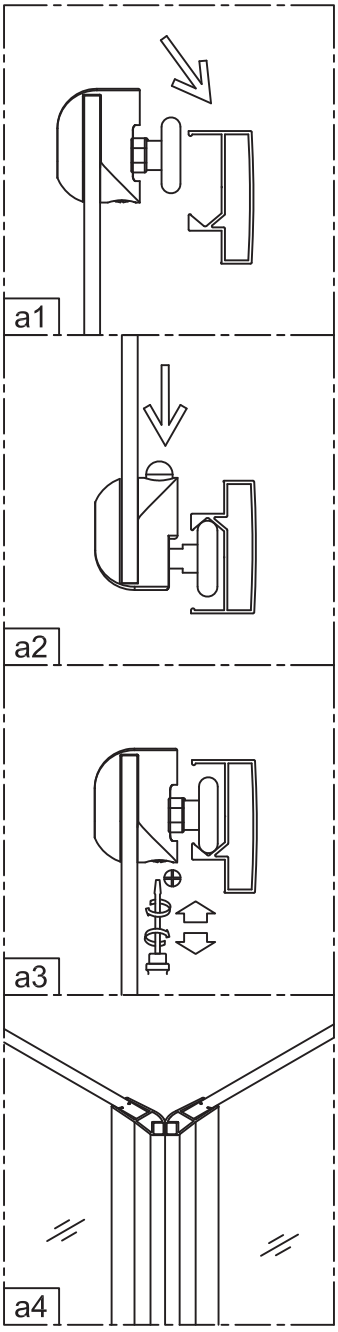

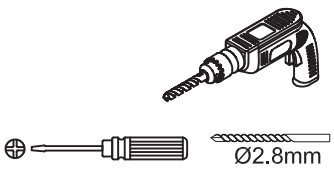

04 18 19





x4 x4

7

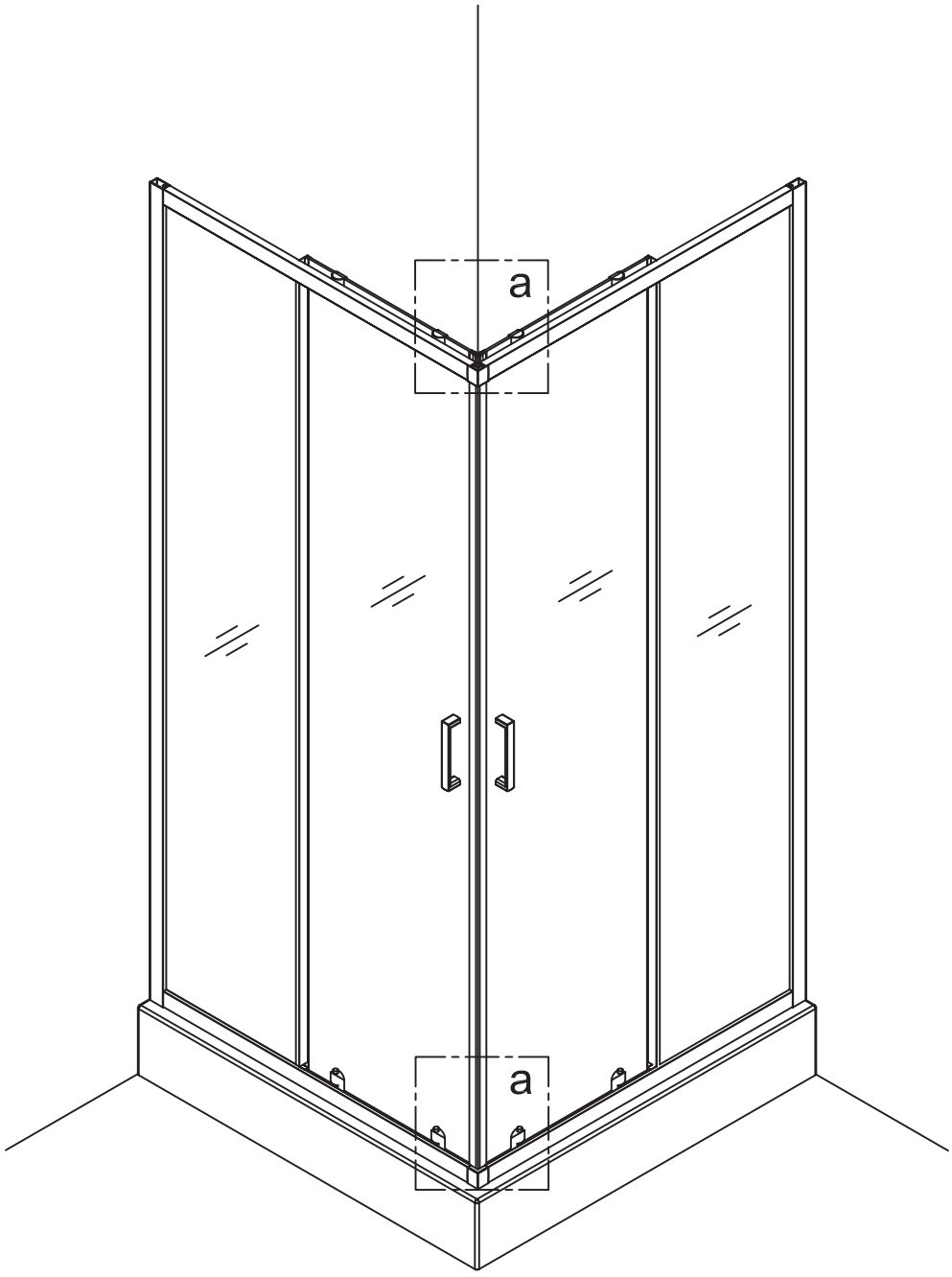

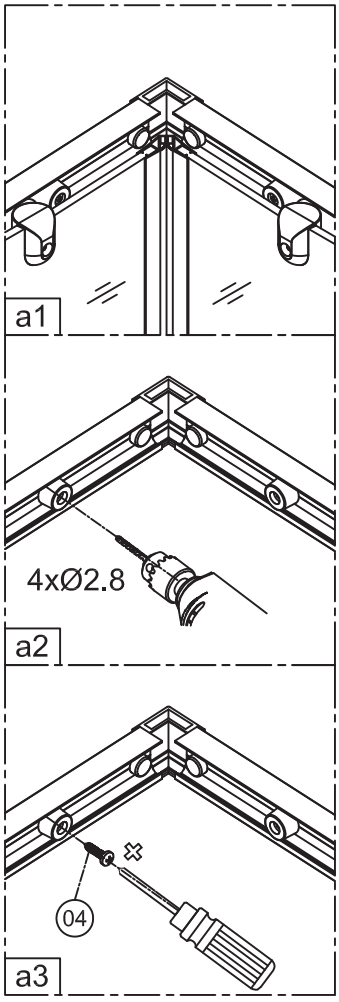

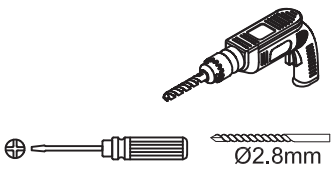

04 18 19





x4 x4

8

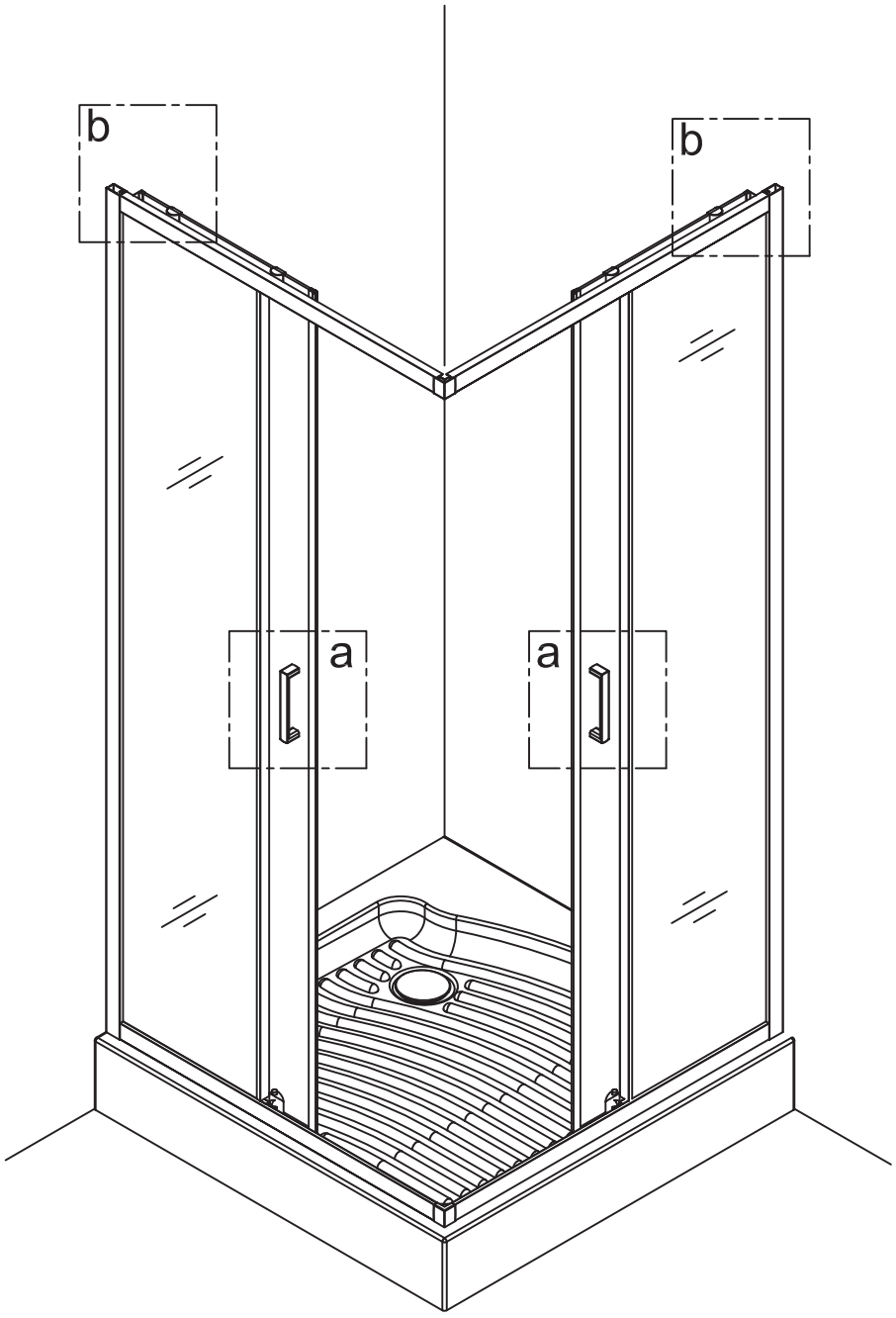

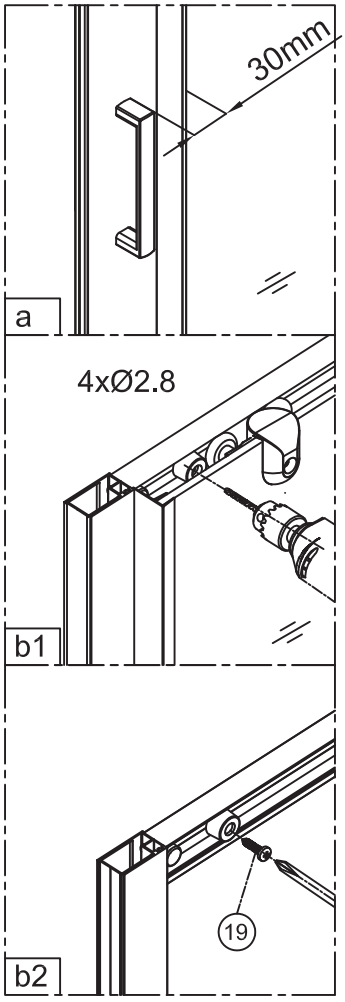

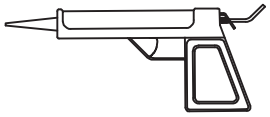

9



