DS-2CV2021G2-IDW
2 MP EXIR Fixed Bullet Wi-Fi Network Camera

- High quality imaging with 2 MP resolution
- Realizing Wi-Fi connection and easy installation
- Provides real-time security via built-in two-way audio
- Efficient H.265 compression technology
- EXIR 2.0, advanced infrared technology with long IR distance
- Wi-Fi connection with Hik-Connect directly is not possible
- Water and dust resistant (IP66)
- Built-in memory card slot, support microSD/microSDHC/microSDXC card, up to 256 GB

▪ Specification

Camera	
Image Sensor	1/2.7" Progressive Scan CMOS
Min. Illumination	Color: 0.005 Lux @ (F1.6, AGC ON),B/W: 0 Lux with IR
Max. Resolution	1920 × 1080
Shutter Time	1/3 s to 1/100,000 s
Day & Night	IR cut filter
Angle Adjustment	Pan: 0° to 360°,tilt: 0° to 90°,rotate: 0° to 360°
Lens	
Lens Type	Fixed focal lens, 2.8 and 4 mm optional
Focal Length & FOV	2.8 mm, horizontal FOV 111°, vertical FOV 59°, diagonal FOV 133° 4 mm, horizontal FOV 91°, vertical FOV 46°, diagonal FOV 110°
Aperture	F1.6
Iris Type	Fixed
Lens Mount	M12
Depth of Field	2.8 mm: 1 m to ∞ 4 mm: 1.1 m to ∞
DORI	
DORI	2.8 mm, D: 42 m, O: 17 m, R: 9 m, I: 4 m 4 mm, D: 52 m, O: 21 m, R: 11 m, I: 5 m
Illuminator	
Supplement Light Type	IR
Supplement Light Range	Up to 30 m
IR Wavelength	850 nm
Smart Supplement Light	Yes
Video	
Main Stream	50 Hz: 25 fps (1920 × 1080, 1280 × 720) 60 Hz: 30 fps (1920 × 1080, 1280 × 720)
Sub-Stream	50 Hz: 25 fps (640 × 480, 640 × 360) 60 Hz: 30 fps (640 × 480, 640 × 360)
Video Compression	Main stream: H.265+/H.265/H.264+/H.264 Sub-stream: H.265/H.264/MJPEG
Video Bit Rate	32 Kbps to 8 Mbps
H.264 Type	Baseline Profile/Main Profile/High Profile
H.265 Type	Main Profile
Audio	
Audio Compression	G.711ulaw/G.711alaw/G.722.1/G.726/MP2L2/PCM/AAC
Audio Bit Rate	64 Kbps (G.711)/16 Kbps (G.722.1)/16 Kbps (G.726)/32 to 160 Kbps (MP2L2)/16 to 64 Kbps (AAC)
Audio Sampling Rate	8 kHz/16 kHz
Environment Noise Filtering	Yes
Network	
Protocols	TCP/IP, ICMP, HTTP, HTTPS, FTP, DHCP, DNS, DDNS, RTP, RTSP, RTCP, PPPoE, NTP, UPnP™, SMTP, SNMP, IGMP, 802.1X, QoS, IPv6, Bonjour
Simultaneous Live View	Up to 6 channels

API	Open Network Video Interface, ISAPI
User/Host	Up to 32 users. 3 levels: administrator, operator and user
Client	Wired network: Hik-Connect, iVMS-4200 Wi-Fi: iVMS-4200 *Wi-Fi connection with Hik-Connect directly is not possible.
Web Browser	Plug-in required live view: IE 10+ Plug-in free live view: Chrome 57.0+, Firefox 52.0+ Local service: Chrome 57.0+, Firefox 52.0+
Wi-Fi	
Transfer Rate	11n: up to 300 Mbps
Wi-Fi Protocol	802.11n: OFDM 802.11b: DSSS 802.11g: OFDM
Frequency Range	2.412 GHz to 2.472 GHz
Channel Bandwidth	20/40 MHz
Modulation	802.11n: BPSK, QPSK, 16QAM, and 64QAM 802.11b: DBPSK and DQPSK, CCK 802.11g: BPSK, QPSK, 16QAM, and 64QAM
Wireless Range	Up to 120 m (The performance varies based on actual environment)
Antenna	2 Antenna(s)
Image	
Image Settings	Rotate mode, saturation, brightness, contrast, sharpness adjustable by client software or web browser
Day/Night Switch	Auto, Schedule, Day, Night
Wide Dynamic Range (WDR)	120 dB
Image Enhancement	BLC, 3D DNR
Interface	
Built-in Microphone	Yes
Built-in Speaker	Yes
On-Board Storage	Built-in memory card slot, support microSD/microSDHC/microSDXC card, up to 256 GB
Reset Key	Yes
Ethernet Interface	1 RJ45 10 M/100 M self-adaptive Ethernet port
Event	
Basic Event	Motion detection, exception
General	
Power	12 VDC ± 25%, 0.5 A, max. 6 W, Ø5.5 mm coaxial power plug, reverse polarity protection, A switching adapter is included in the package.
Storage Conditions	-30 °C to 60 °C (-22 °F to 140 °F). Humidity 95% or less (non-condensing)
Language	English, Ukrainian
Startup and Operating Conditions	-30 °C to 60 °C (-22 °F to 140 °F). Humidity 95% or less (non-condensing)
General Function	Anti-flicker, heartbeat, mirror, password protection, watermark, IP address filter
Material	Base: metal, front cover: metal, back cover: plastic

Dimension	175.6 mm × 73 mm × 89.1 mm (6.9" × 2.9" × 3.5")
Package Dimension	260 mm × 125 mm × 125 mm (10.2" × 4.9" × 4.9")
Weight	Approx. 345 g (0.8 lb.)
With Package Weight	Approx. 690 g (1.5 lb.)
Approval	
EMC	FCC: 47 CFR Part 15, Subpart B, CE-EMC: EN 55032: 2015, EN 61000-3-2:2019, EN 61000-3-3: 2013+A1:2019, EN 50130-4: 2011 +A1: 2014, KC: KN32: 2015, KN35: 2015
RF	FCC ID (FCC Part 15.247(BT or 2.4G)); CE-RED (EN 301489-1 V2.1.1(BT or 2.4G); EN 301489-17 V3.1.1(BT or 2.4G); EN 300328 V2.1.1(BT or 2.4G); EN 62311:2008(BT or 2.4G));
Safety	CB: IEC 62368-1: 2014+A11, CE-LVD: EN 62368-1: 2014/A11: 2017
Environment	CE-RoHS: 2011/65/EU, WEEE: 2012/19/EU, Reach: Regulation (EC) No 1907/2006
Protection	IP66: IEC 60529-2013

▪ Available Model

DS-2CV2021G2-IDW (2.8/4 mm)

▪ Typical Application

Hikvision products are classified into three levels according to their anti-corrosion performance. Refer to the following description to choose for your using environment.

This model has NO SPECIFIC PROTECTION.

Level	Description
Top-level protection	Hikvision products at this level are equipped for use in areas where professional anti-corrosion protection is a must. Typical application scenarios include coastlines, docks, chemical plants, and more.
Moderate protection	Hikvision products at this level are equipped for use in areas with moderate anti-corrosion demands. Typical application scenarios include coastal areas about 2 kilometers (1.24 miles) away from coastlines, as well as areas affected by acid rain.
No specific protection	Hikvision products at this level are equipped for use in areas where no specific anti-corrosion protection is needed.

▪ Dimension

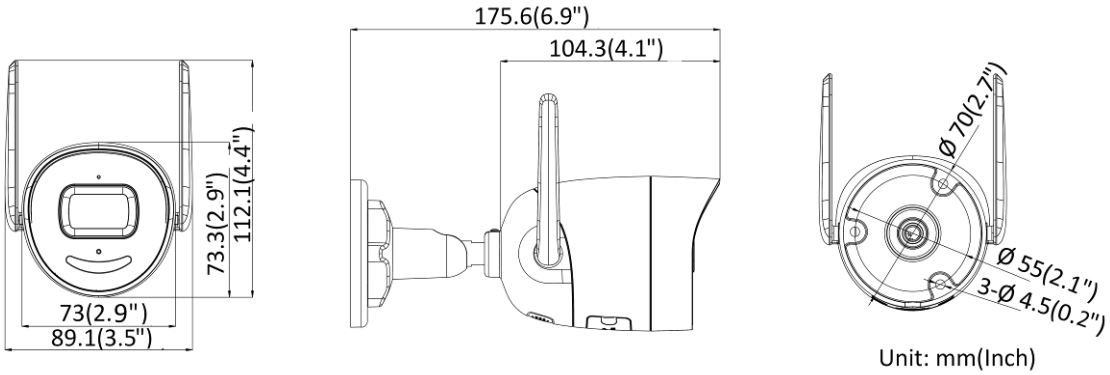

▪ Accessory

▪ Optional

DS-1280ZJ-XS Junction Box

Distributed by

Headquarters
No.555 Qianmo Road, Binjiang District,
Hangzhou 310051, China
T +86-571-8807-5998
overseasbusiness@hikvision.com

Hikvision USA
T +1-909-895-0400
sales.usa@hikvision.com

Hikvision Europe
T +31-23-5542770
sales.eu@hikvision.com

Hikvision UK & Ireland
T +01628-902140
sales.uk@hikvision.com

Hikvision UAE
T +971-4-4432090
salesme@hikvision.com

Hikvision Russia
T +7-495-669-67-99
saleru@hikvision.com

Hikvision Australia
T +61-2-8599-4233
salesau@hikvision.com

Hikvision Italy
T +39-0438-6902
info.it@hikvision.com

Hikvision South Africa
Tel: +27 (10) 0351172
sale.africa@hikvision.com

Hikvision Singapore
T +65-6684-4718
sg@hikvision.com

Hikvision Korea
T +82-(0)31-731-8817
sales.korea@hikvision.com

Hikvision India
T +91-22-28469900
sales@pramahikvision.com

Hikvision Brazil
T +55 11 3318-0050
Latam.support@hikvision.com

Hikvision France
T +33(0)1-85-330-450
info.fr@hikvision.com

Hikvision Spain
T +34-91-737-16-55
info.es@hikvision.com

Hikvision Poland
T +48-22-460-01-50
info.pl@hikvision.com

Hikvision Canada
T +1-866-200-6690
sales.canada@hikvision.com

Hikvision Turkey
T +90 (216)521 7070- 7074
sales.tr@hikvision.com

Hikvision Kazakhstan
T +7-727-9730667
nikia.panfilov@hikvision.ru

Hikvision Tashkent
T +99-87-1238-9438
uzb@hikvision.ru

Hikvision Indonesia
T +62-21-2933759
Sales.Indonesia@hikvision.com

Hikvision Thailand
T +662-275-9949
sales.thailand@hikvision.com

Hikvision Malaysia
T +601-7652-2413
sales.my@hikvision.com

Hikvision Vietnam
T +84-974270888
sales.vt@hikvision.com

Hikvision Hong Kong
T +852-2151-1761
info.hk@hikvision.com

Hikvision Colombia
sales.colombia@hikvision.com

© Hikvision Digital Technology Co., Ltd. 2020 | Data subject to change without notice |