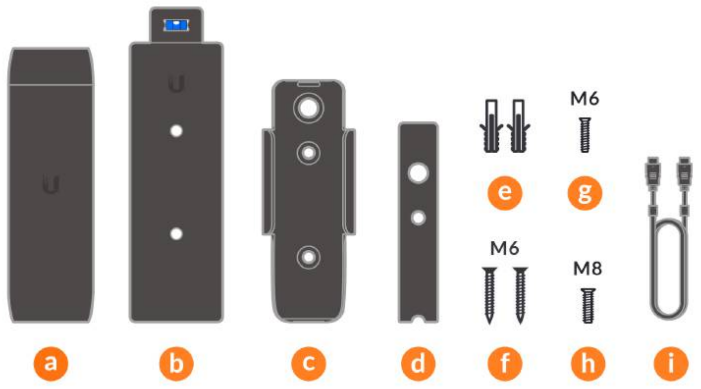
M6
M6
M8
a
b
c
d
e
f
g
h
i

1

A

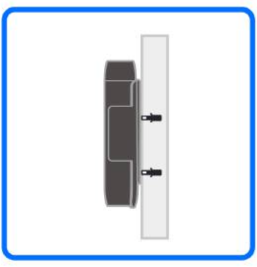

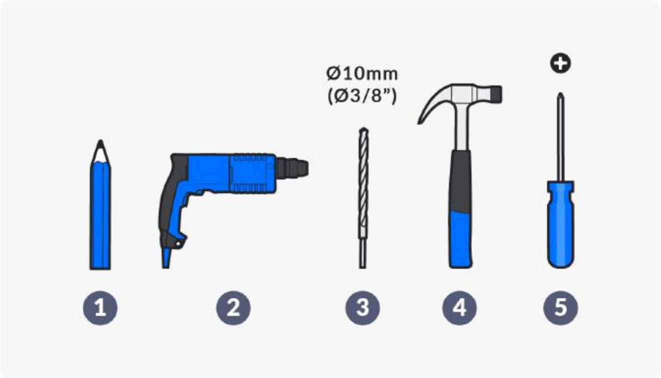
Ø10mm
(Ø3/8”)
1
2
3
4
5

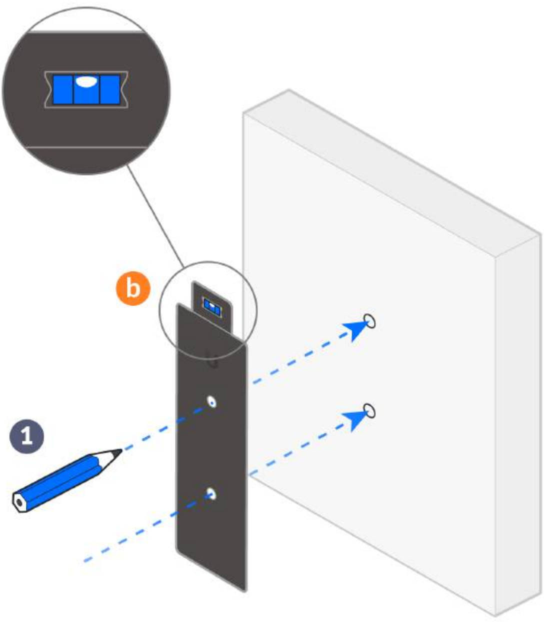

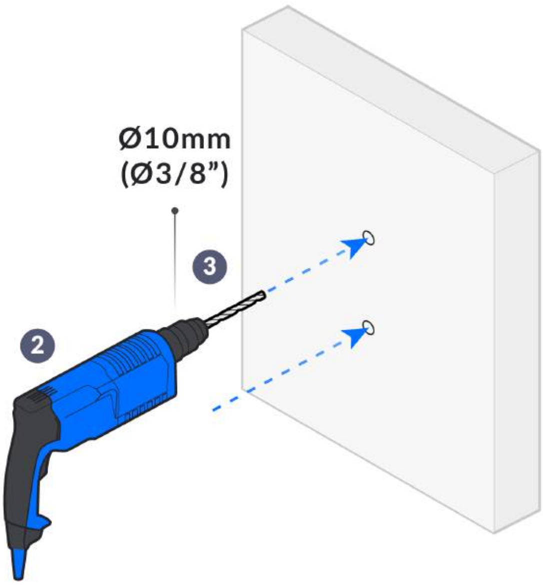
Ø10mm
(Ø3/8”)
3
2

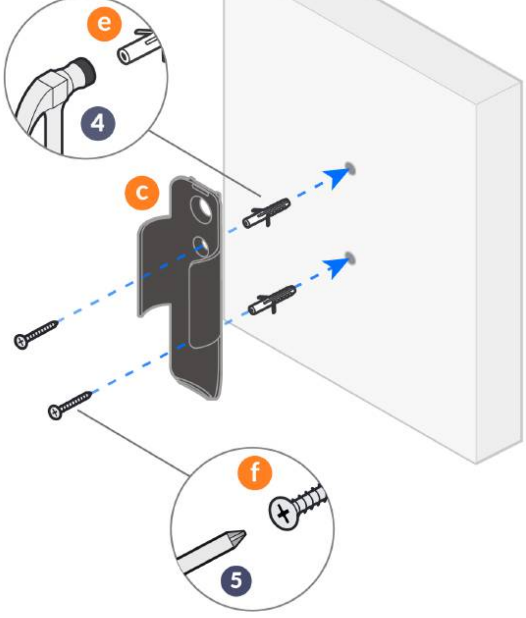

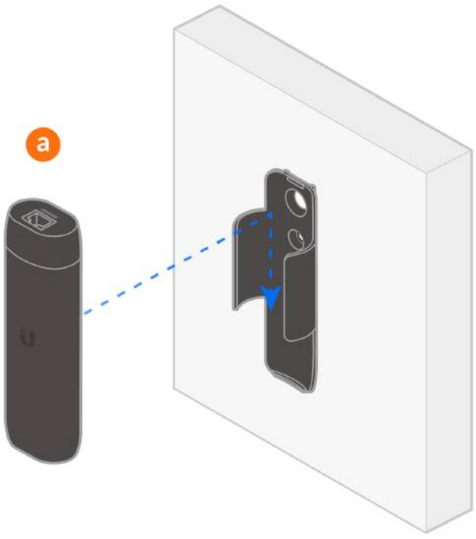

B

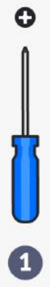

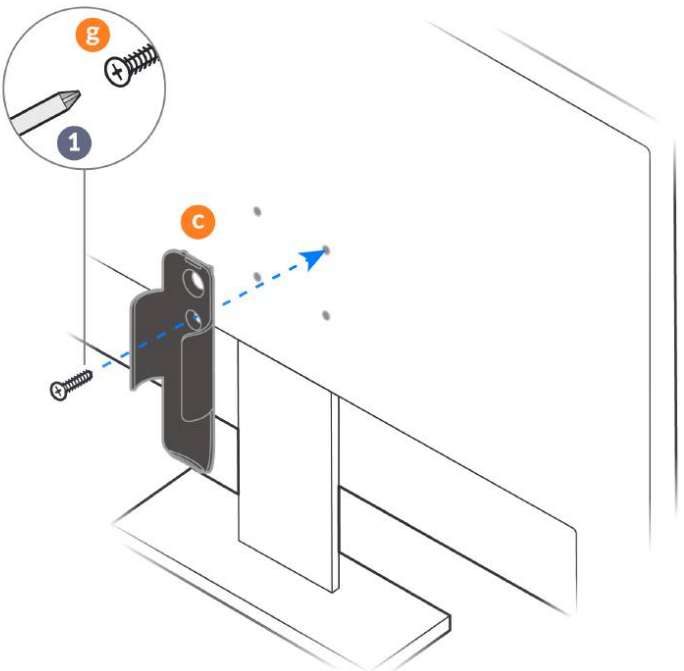

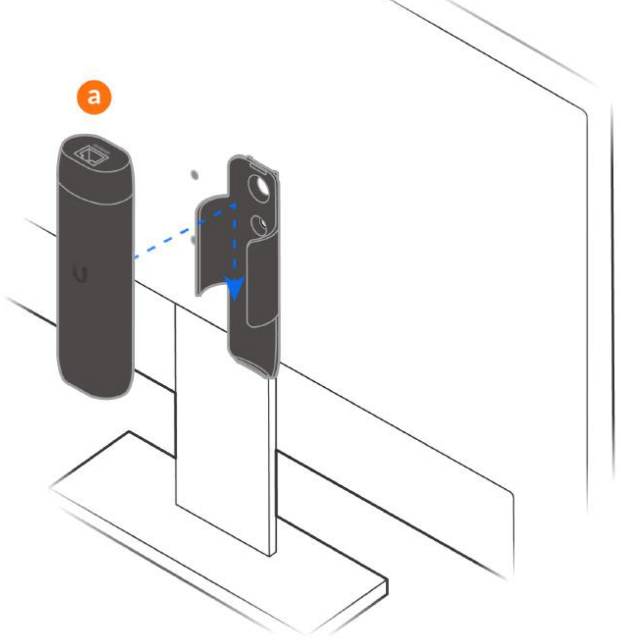

C

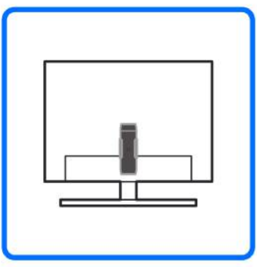

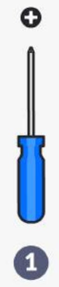

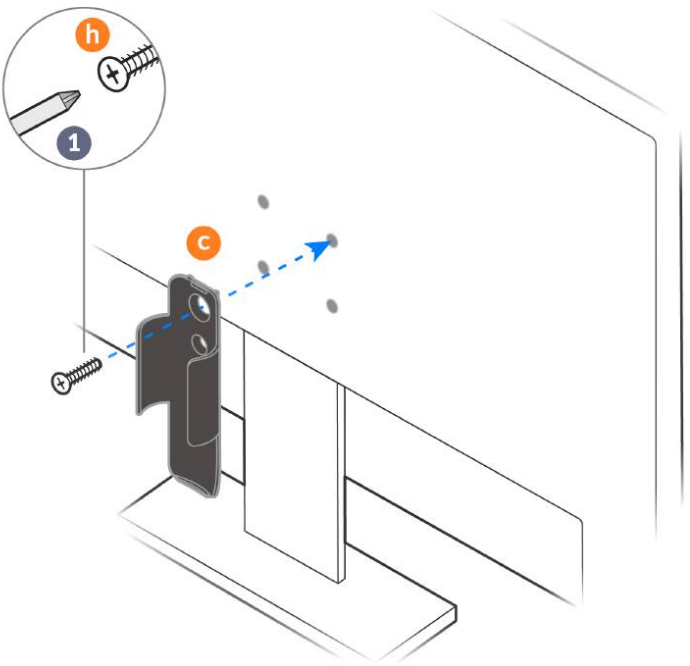

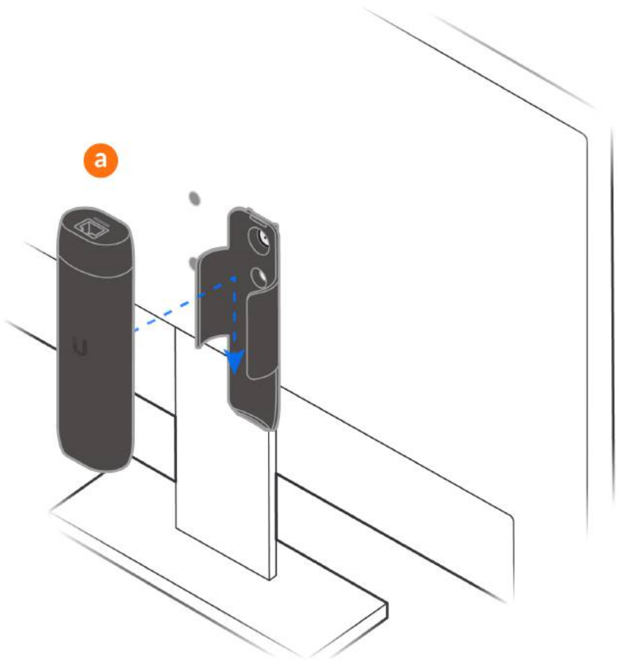

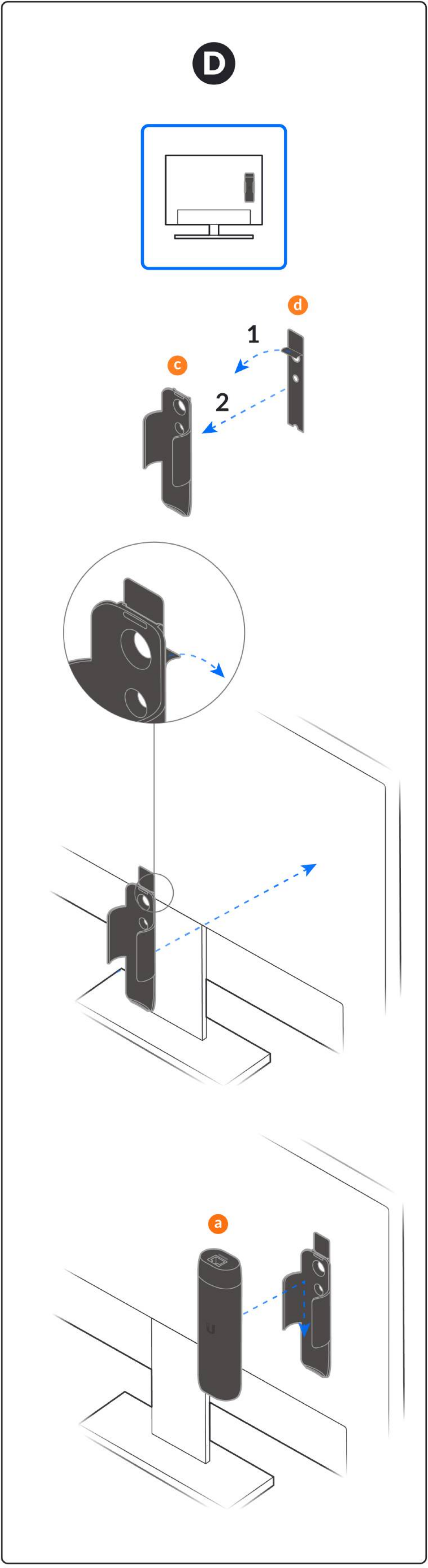

2

Internet

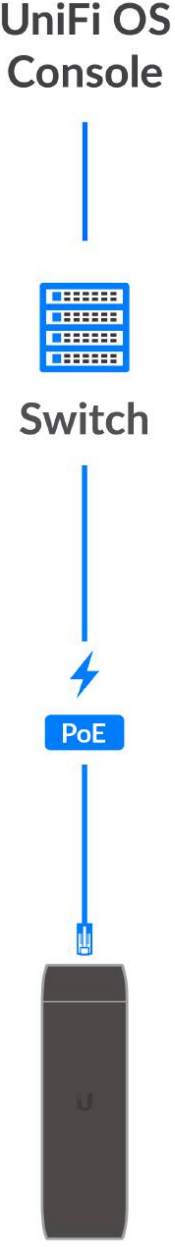
UniFi OS Console
Switch
PoE

3

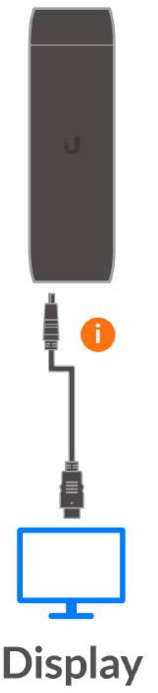

4

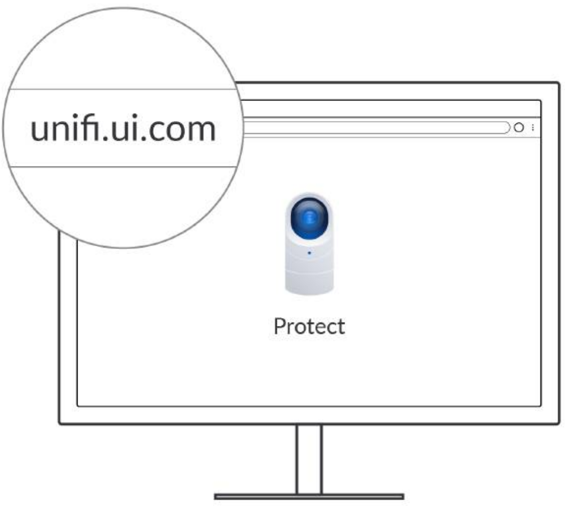
unifi.ui.com
Protect

Get Answers
help.ui.com

UI Support

©2021 Ubiquiti Inc. All rights reserved. Ubiquiti, Ubiquiti Networks, the Ubiquiti U logo, UniFi, and UniFi Protect are trademarks or registered trademarks of Ubiquiti Inc. in the United States and in other countries. The terms HDMI, HDMI High-Definition Multimedia Interface, and the HDMI Logo are trademarks or registered trademarks of HDMI Licensing Administrator, Inc. All other trademarks are the property of their respective owners.