Manual Usuario
UPS ESOL TRI PT

10~40kVA

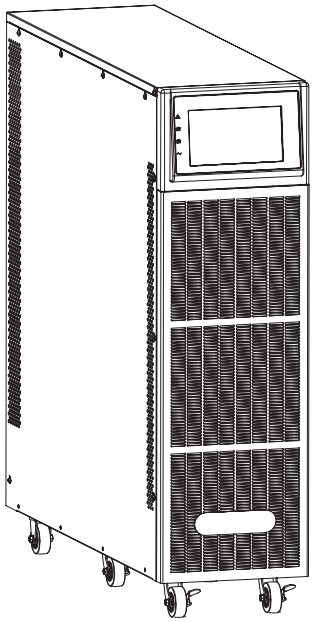

ventas@enersafe.cl | www.enersafe.cl | +5641 3133345

Contents

1. Safety 2
   1.1 Safety notes 2
   1.2 Symbols used in this guide 2
2. Main Features 3
   2.1 Summarization 3
   2.2 Functions and Features 3
3. Installation 4
   3.1 Unpack checking 4
   3.2 Cabinet Outlook 4
   3.3 LCD control panel 7
   3.4 Installation notes 7
   3.5 External Protective Devices 8
   3.6 Power Cables 8
   3.7 Power cable connect 9
   3.8 Battery connection 10
   3.9 UPS parallel Installation 12
   3.10 Computer access 13
4. Operation 14
   4.1 Operation Modes 14
   4.2 Turn on/off UPS 16
   4.3 The LCD Display 21
   4.4 Options 29

Appendix 1 Specifications 31
Appendix 2 Problems and Solution 34
Appendix 3 USB communication port definition 35
Appendix 4 RS232 communication port definition 36
Appendix 5 RS485 communication port definition 37
Appendix 6 BAT_T communication port definition 38
Appendix 7 Dry contact port communication port definition 38
Appendix 8 REPO instruction 39

1. Safety

Important safety instructions - Save these instructions

There exists dangerous voltage and high temperature inside the UPS. During the installation, operation and maintenance, please abide the local safety instructions and relative laws, otherwise it will result in personnel injury or equipment damage. Safety instructions in this manual act as a supplementary for the local safety instructions. Our company will not assume the liability that caused by disobeying safety instructions.

1.1 Safety notes

1. Even no connection with utility power, 220/230/240VAC voltage may still exist at UPS terminal!
2. For the sake of human being safety, please well earth the UPS before starting it.
3. Don't open or damage battery, for the liquid spilled from the battery is strongly poisonous and do harmful to body!
4. Please avoid short circuit between anode and cathode of battery, otherwise, it will cause spark or fire!
5. Don't disassemble the UPS cover, or there may be an electric shock!
6. Check if there exists high voltage before touching the battery
7. Working environment and storage way will affect the lifetime and reliability of the UPS. Avoid the UPS from working under following environment for long time
   - Area where the humidity and temperature is out of the specified range(temperature 0 to 40℃, relative humidity 5%-95%)
   - Direct sunlight or location nearby heat
   - Vibration Area with possibility to get the UPS crashed.
   - Area with erosive gas, flammable gas, excessive dust, etc
8. Keep ventilations in good conditions otherwise the components inside the UPS will be over-heated which may affect the life of the UPS.

1.2 Symbols used in this guide

WARNING!

Risk of electric shock

CAUTION!

Read this information to avoid equipment damage

2. Main Features

2.1 Summarization

This series UPS is a kind of three-in-three-out high frequency online UPS.

The UPS can solve most of the power supply problems, such as blackout, over-voltage, under-voltage, voltage sudden drop, oscillating of decreasing extent, high voltage pulse, voltage fluctuation, surge, inrush current, harmonic distortion (THD), noise interference, frequency fluctuation, etc..

This UPS can be applied to different applications from computer device, automatic equipment, communication system to industry equipment.

2.2 Functions and Features

◆3Phase In/3Phase Out UPS

It is 3Phase In/3Phase Out high-density UPS system, of which input current is kept in balance. No unbalance problem might occur.

◆Digital Control

This series UPS is controlled by Digital Signal Processor (DSP); enhance, it increases reliability, performance, self-protection, and self-diagnostics and so on.

◆Battery Configurable

10-30kVA: from 16 blocks to 20 blocks, the battery voltage of this series UPS can be configured at 16 blocks, 18 blocks or 20 blocks according to your convenience.

40kVA: from 32 blocks to 40 blocks, the battery voltage of this series UPS can be configured at 32 blocks, 34 blocks, 36 blocks, 38 blocks or 40 blocks according to your convenience.

◆Charging Current is configurable

Via setting tool, the user may set the capacity of the batteries as well as reasonable charging current as well as maximum charging current. Constant voltage mode, constant current mode or floating mode can be switched automatically and smoothly.

◆Intelligent Charging Method

The series UPS adopts advanced three-stage charging method—

1st stage: high current constant current charging

to guarantee to charge back to 90%;

2nd-stage: Constant Voltage

In order to vitalize battery and make sure batteries are fully charged

3rd stage: floating mode.

With this 3-stage charging method, it extends the life of the batteries and guarantees fast charging.

◆LCD Display

With LCD plus LED displays, the user may easily get UPS status and its operational

parameters, such as input/output voltage, frequency & load%, battery % and ambient temperature, etc...

◆Intelligent Monitoring Function

Via optional SNMP Card, you may remotely control and monitor the UPS.

◆EPO Function

The series UPS may be completely shut off when the EPO is pressed. REPO function (Remote EPO) is also available in this series UPS.

3. Installation

3.1 Unpack checking

1. Don’t lean the UPS when moving it out from the packaging

2. Check the appearance to see if the UPS is damaged or not during the transportation, do not switch on the UPS if any damage found. Please contact the dealer right away.

3. Check the accessories according to the packing list and contact the dealer in case of missing parts.

3.2 Cabinet Outlook

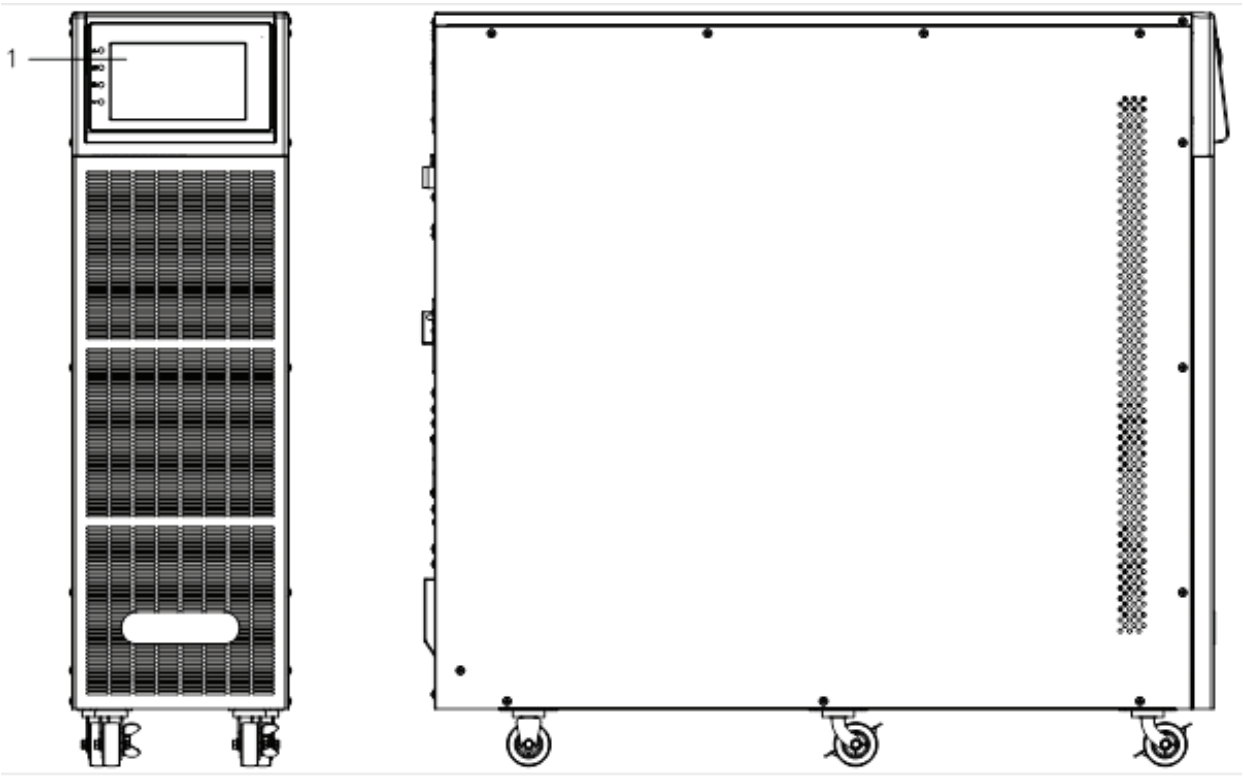

Front View **Side View**

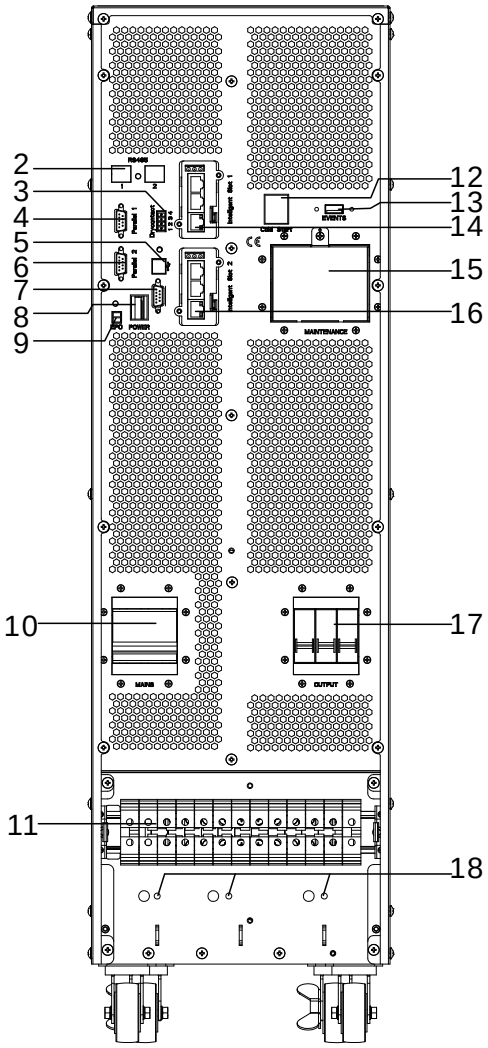

10-20kVA Rear View (terminal block without cover)

(1) LCD panel	(2) RS485 port
(3) Dry contact port	(4) Parallel port 1
(5) USB port	(6) Parallel port 2
(7) RS232	(8) Power Switch
(9) REPO port	(10) I/P Switch
(11) Terminal block	(12) Cold start button
(13) EVENTS port	(14) Intelligent Slot 1 (SNMP card/ Relay card)
(15) Maintenance switch & its cover	(16) Intelligent Slot 2 (SNMP card/ Relay card)
(17) O/P Switch	(18) Ground

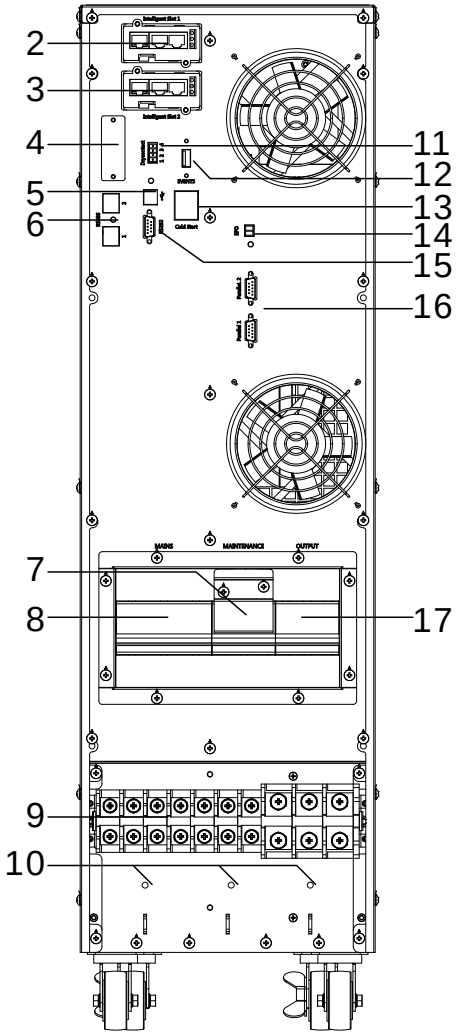

30-40kVA Rear View (terminal block without cover)

(1) LCD panel	(2) Intelligent Slot 1 (SNMP card/ Relay card)
(3) Intelligent Slot 2 (SNMP card/ Relay card)	(4) Battery Power Switch
(5) USB port	(6) RS485 port
(7) Maintenance switch & its cover	(8) I/P Switch
(9) Terminal block for Input, output & battery	(10) Ground
(11) Dry contact port	(12) EVENTS port
(13) Cold start button	(14) REPO port
(15) RS232 port	(16) Parallel port
(17) O/P Switch	

3.3 LCD control panel

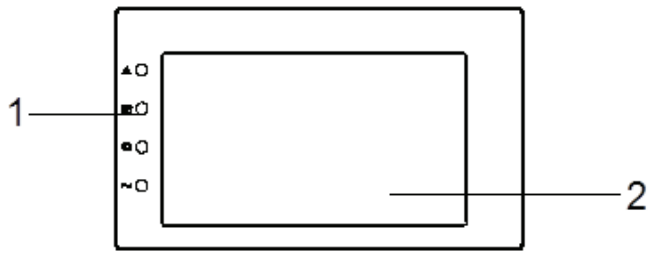

LCD control panel introduction

（1）LED（from top to bottom: “alarm”, “bypass”, “battery”, “inverter”）　（2）LCD display

3.4 Installation notes

Note: Consider for the convenience of operation and maintenance, the space in front and back of the cabinet should be left at least 100cm and 80cm respectively when installing the cabinet.

◆Please place the UPS in a clean, stable environment, avoid the vibration, dust, humidity, flammable gas and liquid, corrosive. To avoid from high room temperature, a system of room extractor fans is recommended to be installed. Optional air filters are available if the UPS operates in a dusty environment.

◆The environment temperature around UPS should keep in a range of 0℃～40℃. If the environment temperature exceeds 40℃, the rated load capacity should be reduced by 12％ per 5℃. The max temperature can't be higher than 50℃.

◆If the UPS is dismantled under low temperature, it might be in a condensing condition. The UPS can't be installed unless the internal and external of the equipment is fully dry. Otherwise, there will be in danger of electric shock.

◆Batteries should be mounted in an environment where the temperature is within the required specs. Temperature is a major factor in determining battery life and capacity. In a normal installation, the battery temperature is maintained between 15°C and 25°C. Keep batteries away from heat sources or main air ventilation area, etc.

WARNING!

Typical battery performance data are quoted for an operating temperature between 20°C and 25°C. Operating it above this range will reduce the battery life while operation below this range will reduce the battery capacity.

◆Should the equipment not be installed immediately it must be stored in a room so as to protect it against excessive humidity and or heat sources.

CAUTION!

An unused battery must be recharged every 6months Temporarily connecting the UPS to a suitable AC supply mains and activating it for the time required for recharging the batteries.

◆The highest altitude that UPS may work normally with full load is 1500 meters. The load capacity should be reduced when this UPS is installed in place whose altitude is higher than 1500 meters, shown as the following table:

(Load coefficient equals max load in high altitude place divided by nominal power of the UPS)

Altitude (m)	1500	2000	2500	3000	3500	4000	4500	5000
Load coefficient	100%	95%	90%	85%	80%	75%	70%	65%

◆The UPS cooling is depending on fan, so it should be kept in good air ventilation area. There are many ventilation holes on the front and rear, so they should not be blocked by any exotic obstacles.

3.5 External Protective Devices

For safety reasons, it is necessary to install, external circuit breaker at the input A.C. supply and the battery. This chapter provides guidelines for qualified installers that must have the knowledge of local wiring practices for the equipment to be installed.

◆**External Battery**

The UPS and its associated batteries are protected against the effect of over-current through a DC compatible thermo-magnetic circuit-breaker (or a set of fuses) located close to the battery.

◆**UPS Output**

Any external distribution board used for load distribution shall be fitted with protective devices that may avoid the risk of UPS overloaded.

◆**Over-current**

Protection device shall be installed at the distribution panel of the incoming main supply. It may identify the power cables current capacity as well as the overload capacity of the system.

3.6 Power Cables

◆The cable design shall comply with the voltages and currents provided in this section, Kindly follow local wiring practices and take into consideration the environmental conditions (temperature and physical support media) .

WARNING!

Upon starting. Please ensure that you are aware of the location and operation of the external isolators which are connected to the UPS input/bypass supply of the mains distribution panel. Check to see if these supplies are electrically isolated. And post and necessary warning signs to prevent any inadvertent operation.

◆For future expansion purpose, it is economical to install power cable according to the full rating capacity initially. The diameter of cable is shown bellow:

UPS cabinet	Cable Dimension			
	AC Input (mm^2)	AC Output (mm^2)	DC Input (mm^2)	Grounding (mm^2)
10KVA	4	4	10	4
15KVA	6	6	16	6
20KVA	8	8	20	8
30kVA	12	12	35	8
40kVA	16	16	35	10

CAUTION!

Protective earth cable: Connect each cabinet to the main ground system. For Grounding connection, follow the shortest route possible.

WARNING!

Failure to follow adequate earthing procedures may result in electromagnetic interference or in hazards involving electric shock and fire

3.7 Power cable connect

Once the equipment has been finally positioned and secured, connect the power cables as described in the following procedure.

Verify the UPS is totally isolated from its external power source and also all power isolators of the UPS are open. Check to see if they are electrically isolated, and post any necessary warning signs to prevent their inadvertent operation.

Remove the cover of terminals for wiring easily.

10-20kVA:

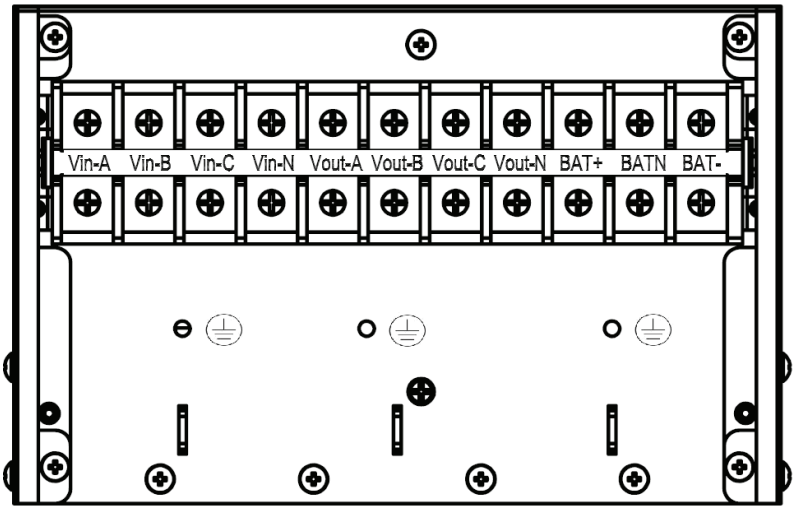

Terminal sequence from left to right: Input phase A(L1), input phase B(L2), input phase C(L3), input Neutral line, output phase A(L1), output phase B(L2), output phase C(L3), output Neutral line, battery positive, battery Neutral, battery negative. There are 3 connectors of GROUND under the terminal block.

30-40kVA:

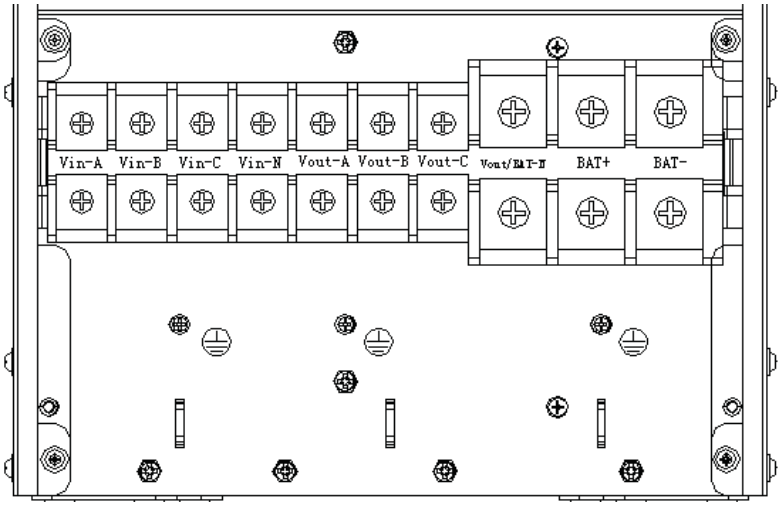

Terminal sequence from left to right: Input phase A(L1), input phase B(L2), input phase C(L3), input Neutral line, output phase A(L1), output phase B(L2), output phase C(L3), output and battery Neutral line, battery positive, battery negative. There are 3 connectors of GROUND under the terminal block.

Choose appropriate power cable. (Refer to the table above) and pay attention to the diameter of the connection terminal of the cable that should be greater than or equal to that of the connection poles;

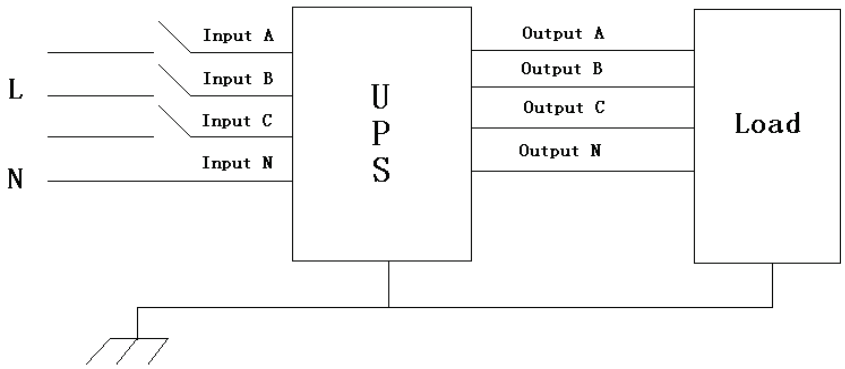

WARNING!

If the load equipment is not ready to accept power on the arrival of the commissioning engineer then ensure that the system output cables are safely isolated at their ends

Connect the safety earth and any necessary bonding earth cables to the copper earth screw located on the floor of the equipment below the power connections. All cabinets in the UPS must be grounded properly.

CAUTION!

The earthing and neutral bonding arrangement must be in accordance with local and national codes of practice.

3.8 Battery connection

10-30kVA:

The UPS adopts positive and negative double battery framework, totally 16pcs (optional 18/20) in series. A neutral cable is retrieved from the joint between the cathode of the 8th (9th/10th) and the anode of the 9th (10th/11th) of the batteries. Then the neutral cable, the battery Positive and the battery negative are connected with the UPS respectively. The battery sets between the Battery anode and the neutral are called positive batteries and that between neutral and cathode are called negative ones. The user can choose the capacity and the numbers of the batteries according to their desire.

External battery connections for long-run units.

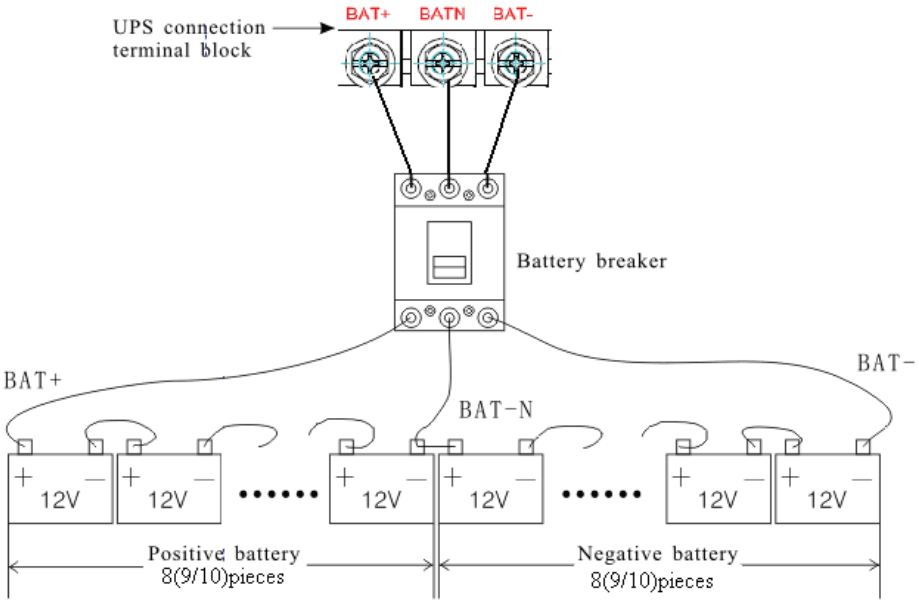

40kVA:

The UPS adopts positive and negative double battery framework, totally 16pcs (optional 18/20) in series. A neutral cable is retrieved from the joint between the cathode of the 16th (17th/18th/19th/20 th) and the anode of the 17th (18th/19th/20th/21th) of the batteries. Then the neutral cable, the battery Positive and the battery negative are connected with the UPS respectively. The battery sets between the Battery anode and the neutral are called positive batteries and that between neutral and cathode are called negative ones. The user can choose the capacity and the numbers of the batteries according to their desire.

External battery connections for long-run units.

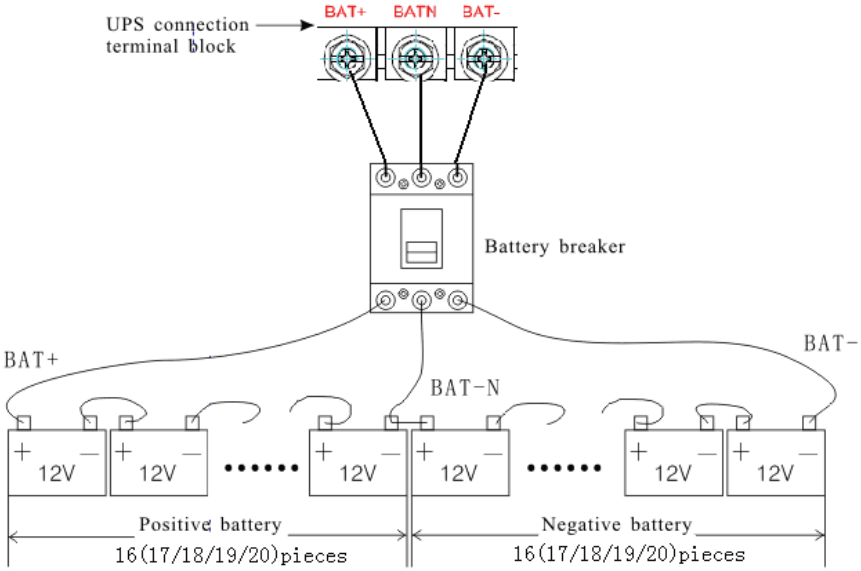

Note:

The BAT+ of the UPS connect poles is connected to the anode of the positive battery, the BAT-N is connected to the cathode of the positive battery and the anode of the negative battery, the BAT- is connected to the cathode of the negative battery.

10-30kVA factory setting of the long-run unit is battery quantity---16pcs, battery capacity---12V65AH (charger current 9.75A). When connecting 18/20 batteries, please re-set desired battery quantity and its capacity after UPS starts at AC mode. Charger current could be adjusted automatically according to battery capacity selected. All related settings can be done through LCD panel or monitoring software

40kVA factory setting of the long-run unit is battery quantity---32pcs, battery capacity---12V65AH (charger current 9.75A). When connecting 32/34/36/38/40 batteries, please re-set desired battery quantity and its capacity after UPS starts at AC mode. Charger current could be adjusted automatically according to battery capacity selected. All related settings can be done through LCD panel or monitoring software

CAUTION!

Ensure correct polarity battery string series connection. I.e. inter-tier and inter block connections are from (+) to (-) terminals. Don't mix batteries with different capacity or different brands, or even mix up new and old batteries, either.

WARNING!

Ensure correct polarity of string end connections to the Battery Circuit Breaker and from the Battery Circuit Breaker to the UPS terminals i.e. (+) to (+) / (-) to (-) but disconnect one or more battery cell links in each tier. Do not reconnect these links and do not close the battery circuit breaker unless authorized by the commissioning engineer.

3.9 UPS parallel Installation

The following sections introduce the installation procedures specified to the parallel system.

3.9.1 Cabinet installation

Connect all the UPS needed to be put into parallel system as below picture.

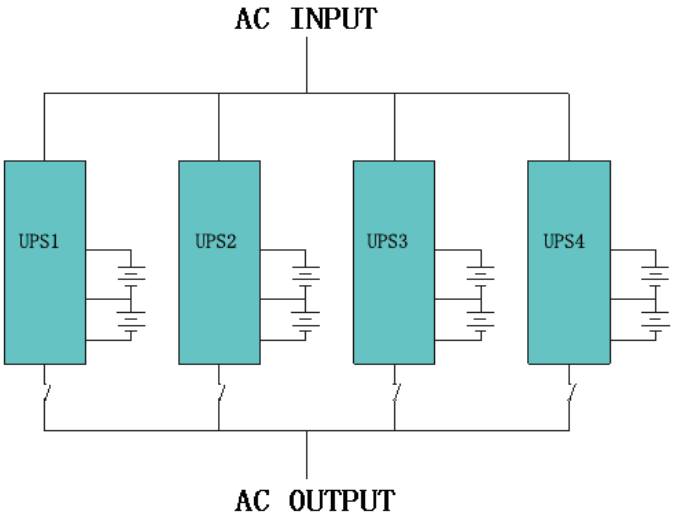

Make sure each UPS input breaker is in “off” position and there is no any output from each UPS connected. Battery groups can be connected separately or in parallel, which means the system itself provides both separate battery and common battery.

WARNING!

Make sure the N, A (L1), B (L2), C (L3) lines are correct, and grounding is well connected.

3.9.2 Parallel cable installation

Shielded and double insulated control cables available must be interconnected in a ring configuration between UPS units as shown below. The ring configuration ensures high reliability of the control.

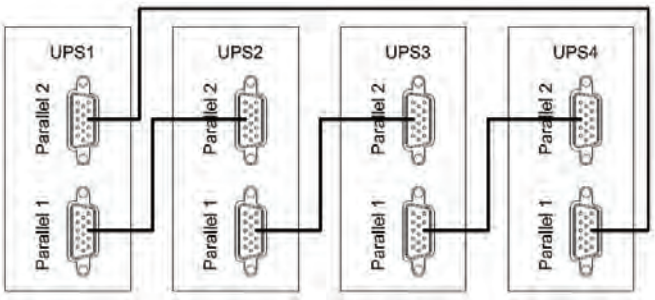

3.9.3 Requirement for the parallel system

A group of paralleled UPS behaves as one large UPS system but with the advantage of presenting higher reliability. In order to assure that all UPS are equally utilized and comply with relevant wiring rules, please follow the requirements below:

1) All UPS must be of the same rating and be connected to the same bypass source.

2) The outputs of all the UPS must be connected to a common output bus.

3) The length and specification of power cables including the bypass input cables and the UPS output cables should be the same. This facilitates load sharing when operating in bypass mode.

3.10 Computer access

◆One end of a USB cable connect to the computer, the other end connect to the USB port on the UPS.

◆Open the software Muser4000, click “system” button.

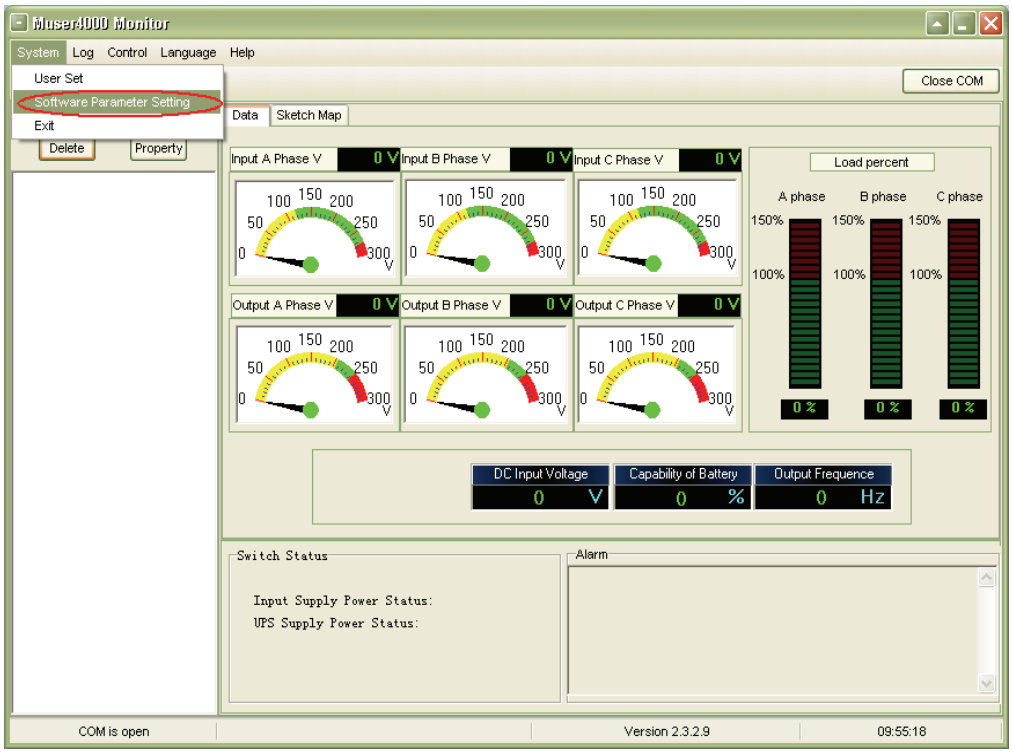

◆A window of “Software Parameter Setting” comes out as below, COM choose according to the UPS , baud rate choose 9600, protocol choose “HIP”, then save this setting.

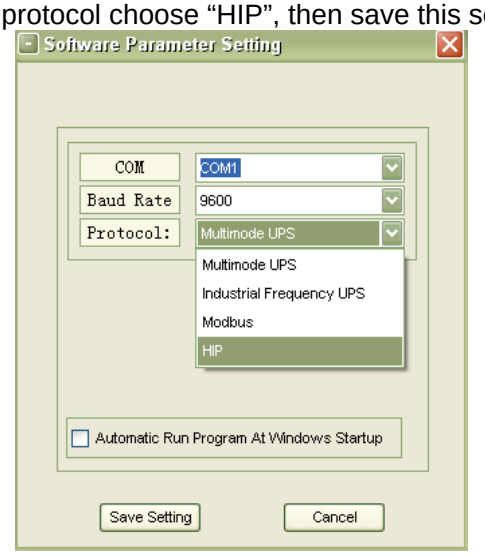

◆On the main page of Muser4000, click the button of “Append”, then goes to a window of “Append equipment”.

◆Put the UPS name into “Equipment Name”, and UPS’ ID address into “Equipment address”.

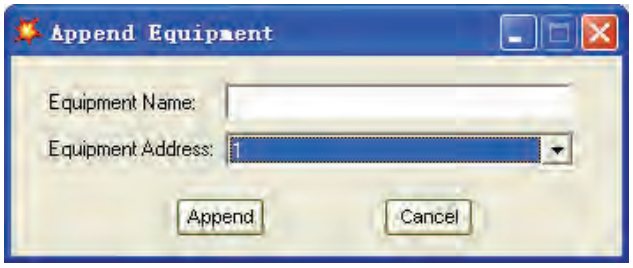

◆Click the button “Append”, then the connection between UPS & computer is accomplished.

CAUTION!

When the UPS worked on inverter. If you want to use PC to set the output voltage and frequency. Must shut down the inverter first

4. Operation

4.1 Operation Modes

The UPS is a double-conversion on-line UPS that may operate in the following alternative modes:

◆Normal mode

The rectifier/charger derives power from the AC Mains and supplies DC power to the inverter while floating and boosting charge the battery simultaneously. Then, the inverter converts the DC power to AC and supplies to the load.

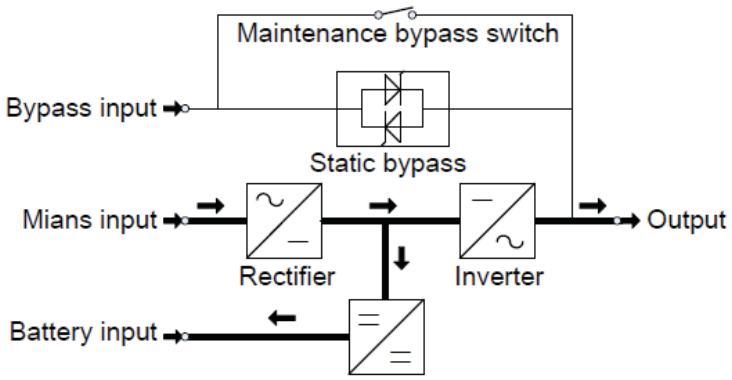

◆Battery mode (Stored Energy Mode)

If the AC mains input power fails, the inverter, which obtains power from the battery, supplies the critical AC load. There is no power interruption to the critical load. The UPS will automatically return to Normal Mode when AC recovers.

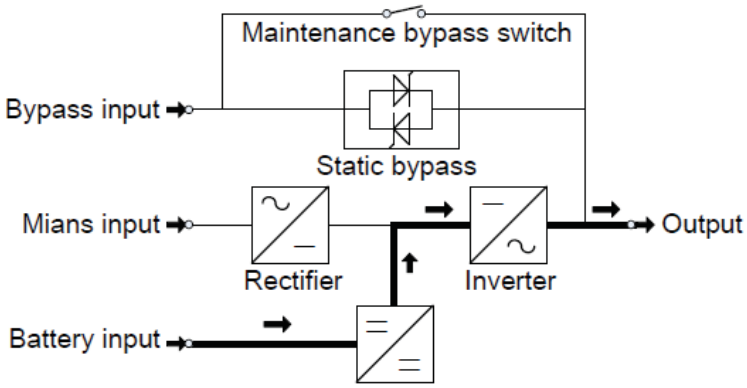

◆Bypass mode

If the inverter is out of order, or if overload occurs, the static transfer switch will be activated to transfer the load from the inverter supply to bypass supply without interruption to the critical load. In the event that the inverter output is not synchronized with the bypass AC source, the static switch will perform a transfer of the load from the inverter to the bypass with power interruption to the critical AC load. This is to avoid paralleling of unsynchronized AC sources. This interruption is programmable but typically set to be less than an electrical cycle e.g. less than 15ms (50Hz) or less than 13.33ms (60Hz).

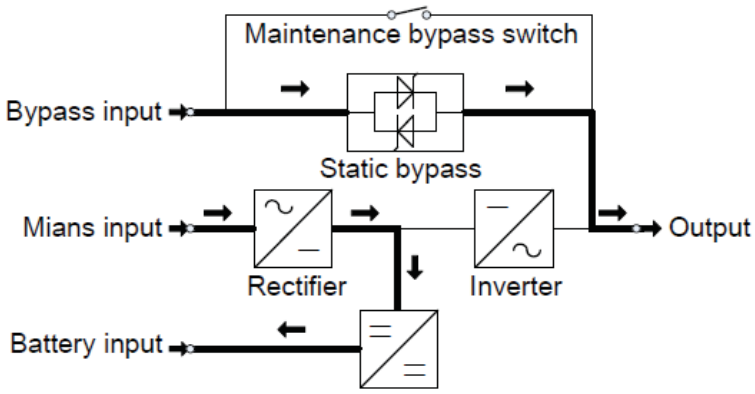

◆ECO Mode

When the UPS is at AC Mode and the requirement to the load is not critical, the UPS can be set at ECO mode in order to increase the efficiency of the power supplied. At ECO mode, the UPS works at Line-interactive mode, so the UPS will transfer to bypass supply. When the AC is out of set window, the UPS will transfer from bypass to Inverter and supplies power from the battery, and then the LCD shows all related information on the screen.

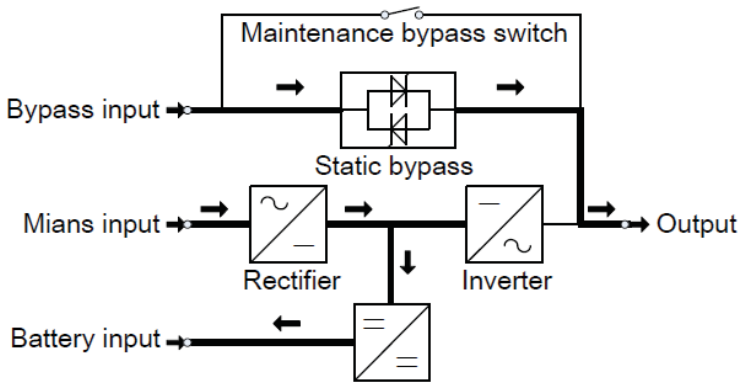

◆**Maintenance mode (Manual Bypass)**

A manual bypass switch is available to ensure continuity of supply to the critical load when the UPS is out of order or in repair and this manual bypass switch bears for equivalent rated load.

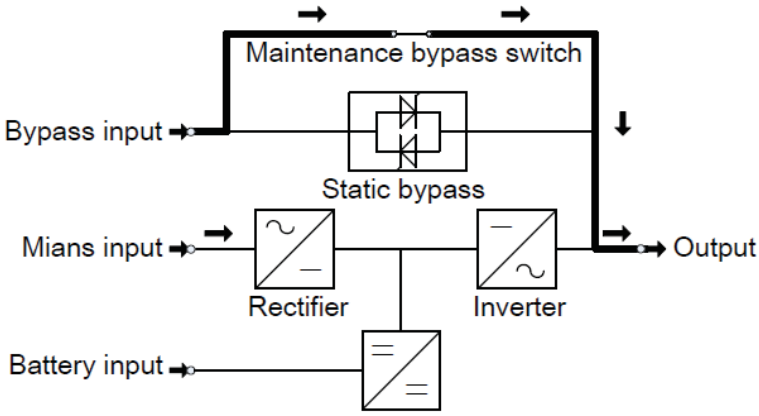

4.2 Turn on/off UPS

4.2.1 Restart procedure

CAUTION!

Make sure grounding is properly done!

- Set the Battery Breaker to the “ON” for long run UPS.
- Switch ON the power switch for standard UPS.

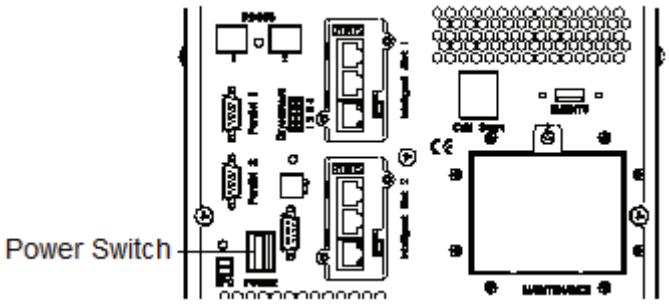

CAUTION!

Check to see if the load is safely connected with the output of the UPS. If the load is not ready to receive power from the UPS, make sure that it is safely isolated from the UPS output terminals

- Switch ON UPS input switch

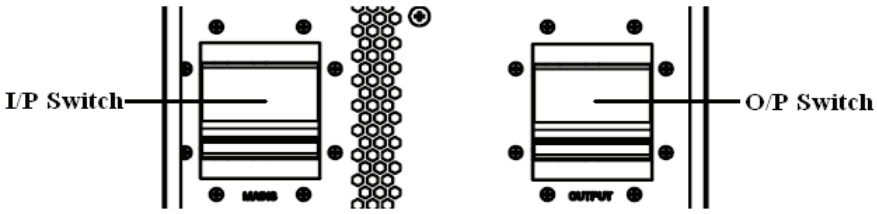

If the Rectifier input is within voltage range, the rectifier will start up in 30 seconds then the inverter will start up after then.

◆ Switch ON UPS output switch

If the rectifier fails at startup, the bypass LED will light up. When the inverter starts up, the UPS will transfer from bypass mode to inverter mode, and then the bypass LED extinguishes and the inverter LED lights up.

No matter whether the UPS can work normally or not, all the status will be shown on the LCD display.

4.2.2 Test procedure

CAUTION!

The UPS is operating normally. It may take 60 seconds to boost up the system and perform self-test completely.

◆ Switch off the MAINS to simulate utility failure, the rectifier will turn off and the battery should feed the inverter without interruption. At this time, the LEDs of battery should be turned on.

◆ Switch on the MAINS to simulate utility recovery, the rectifier will restart automatically after 20 seconds and the inverter will supply to the load. It is suggested to use Dummy loads for testing. The UPS can be loaded up to its maximum capacity during load test.

4.2.3 MAINTENANCE BYPASS

To supply the load via Mains, you may simply active the internal mechanical bypass switch.

CAUTION!

The load is not protected by the UPS when the internal mechanical bypass system is active and the power is not conditioned.

Switch to mechanical bypass

CAUTION!

If the UPS is running normally and can be controlled through the display, carry out steps 1 to 5; otherwise, jump to Step 4.

◆ Open the cover of maintenance switch, the UPS turns to bypass mode automatically.

◆ Turn on MAINTANCE breaker;

◆ Switch OFF BATTERY breaker;

◆ Switch OFF the MAINS breaker,

◆ Switch OFF OUTPUT breaker;

At this time the bypass source will supply to the load through the MAINTENANCE breaker.

Switch to normal operation (from mechanical bypass)

CAUTION!

Never attempt to switch the UPS back to normal operation until you have verified that there are no internal UPS faults

- Switch ON the output breaker.
- Switch ON the input breaker.

The UPS powers from the static bypass instead of the maintenance bypass, then the bypass LED will light up.

- Switch OFF the maintenance bypass breaker, then the output is supplied by the static bypass of the UPS.
- Put on the maintenance switch cover.

The rectifier will operate normally after 30 seconds. If the inverter works normally, the system will be transferred from bypass mode to normal mode.

4.2.4 Cold start procedure

CAUTION!

Follow these procedures when the input AC Utility Failure, but battery is normal

- Set the Battery Breaker to the “ON” for long run UPS.
- Switch ON the power switch for standard UPS.
- Turn on the Output switch.
- Switch ON the power switch (power will feed to auxiliary power board).

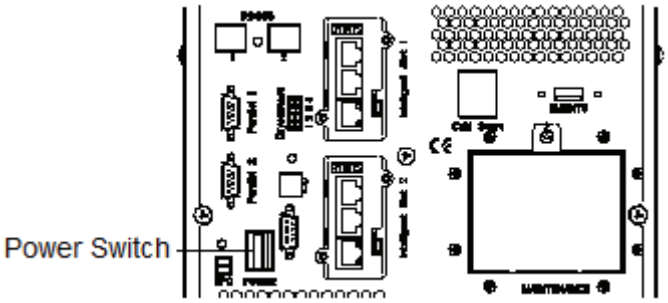

- Trigger the cold start button.

When battery normal, rectifier starts operation, 30s later, inverter starts and operates and battery LED on

CAUTION!

Please press the close start button after 30 seconds until closing the battery switch.

4.2.5 Shut down procedure

CAUTION!

This procedure should be followed to completely shut down the UPS and the LOAD. After all power switches, isolators and circuit breakers are opened, there will be no output.

On-line mode:

- ◆ Press OFF to shut down the UPS, waiting about 30s.
- ◆ Switch OFF the BATTERY breaker for long run UPS. Open the battery power switch for standard UPS.
- ◆ Switch OFF the input breaker.
- ◆ Switch OFF the OUTPUT breaker. The UPS shuts down;
- ◆ To completely isolate the UPS from AC Mains, all input switches of Utility shall be completely off.
- ◆ The primary input distribution panel, which is often located far away from the UPS area, so a label should be posted to advise service personnel that the UPS circuit is under maintenance.

Battery mode:

- ◆ Press OFF to shut down the UPS, waiting about 30s.
- ◆ Switch OFF the BATTERY breaker for long run UPS. Open the battery power switch for standard UPS.
- ◆ Switch OFF the OUTPUT breaker. The UPS shuts down.

WARNING!

Wait for about 5 minutes for the internal D.C. bus bar capacitors to be completely discharged.

4.2.6 Parallel setting

◆Connect the UPS with computer. Power on the UPS.

◆ Open Muser4000 software, after connecting with the UPS successfully, click “System”->“User Set”

◆Click “Set” at “User Set” window;

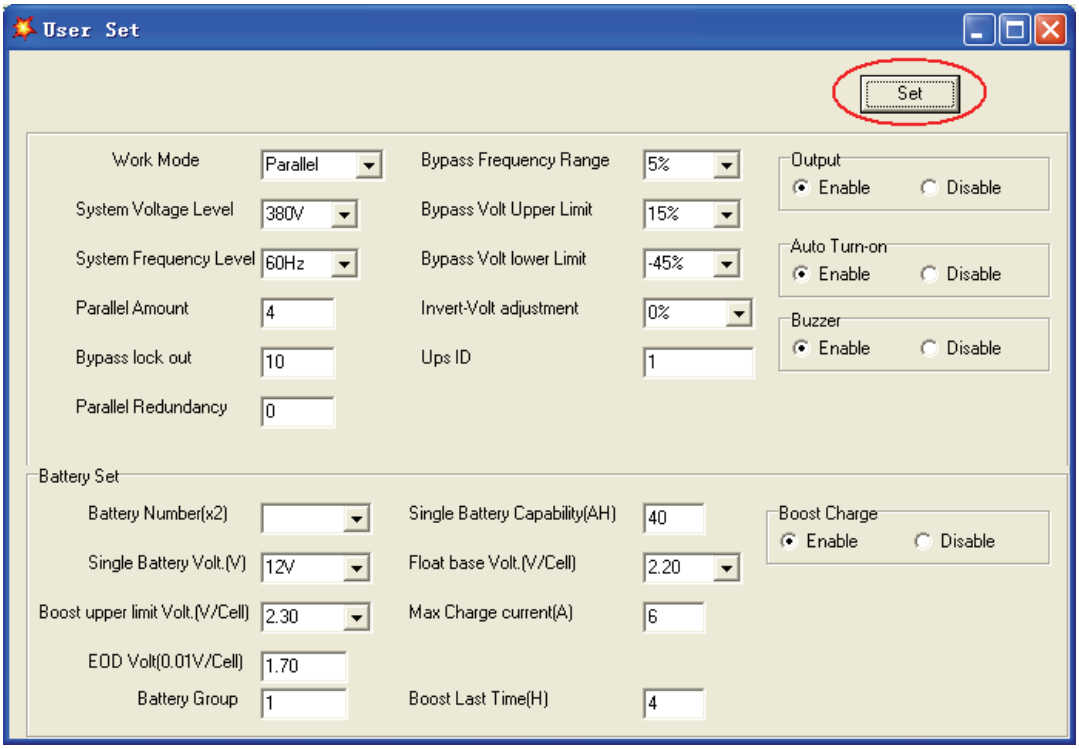

◆At the window of “Data Set”, click “Work Mode”,, choose “Parallel” for the value, then click “Set” as shown in below picture. If the UPS sounds a “beep”, that means the setting is correct.

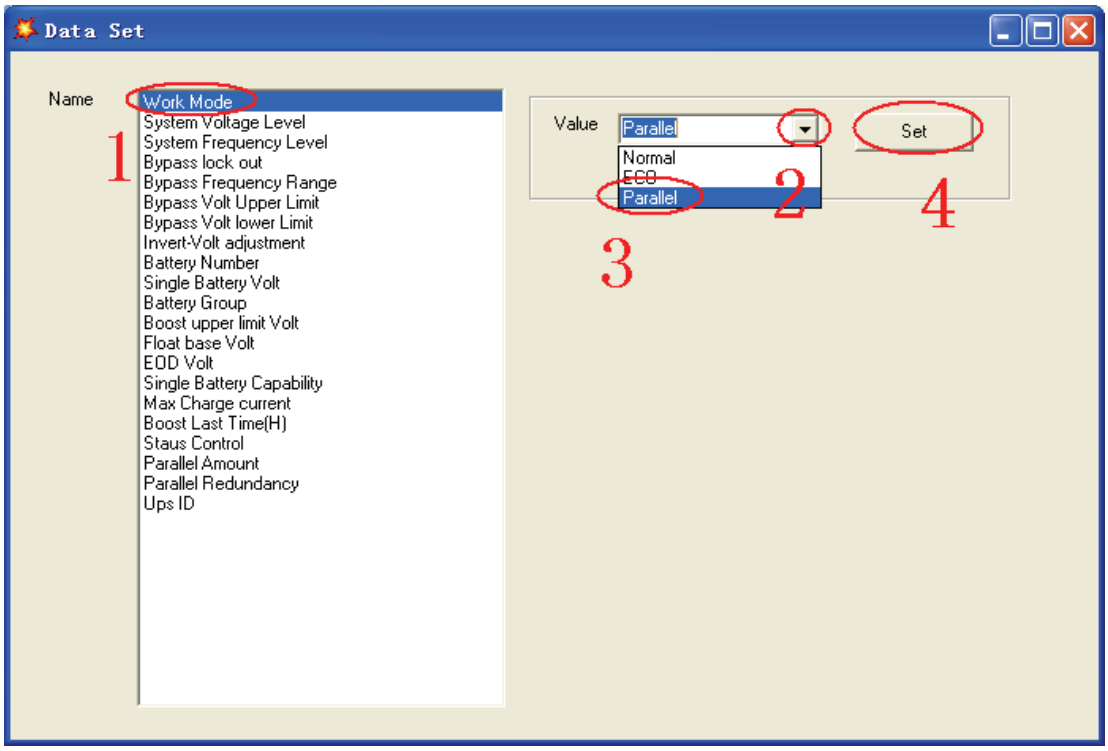

◆At the window of “Data Set”, click “Ups ID”, write a value for the parallel UPS ID at the right side, such as “1”, then click “Set” as shown in below picture. If the UPS sounds a “beep”, that means the setting is correct.

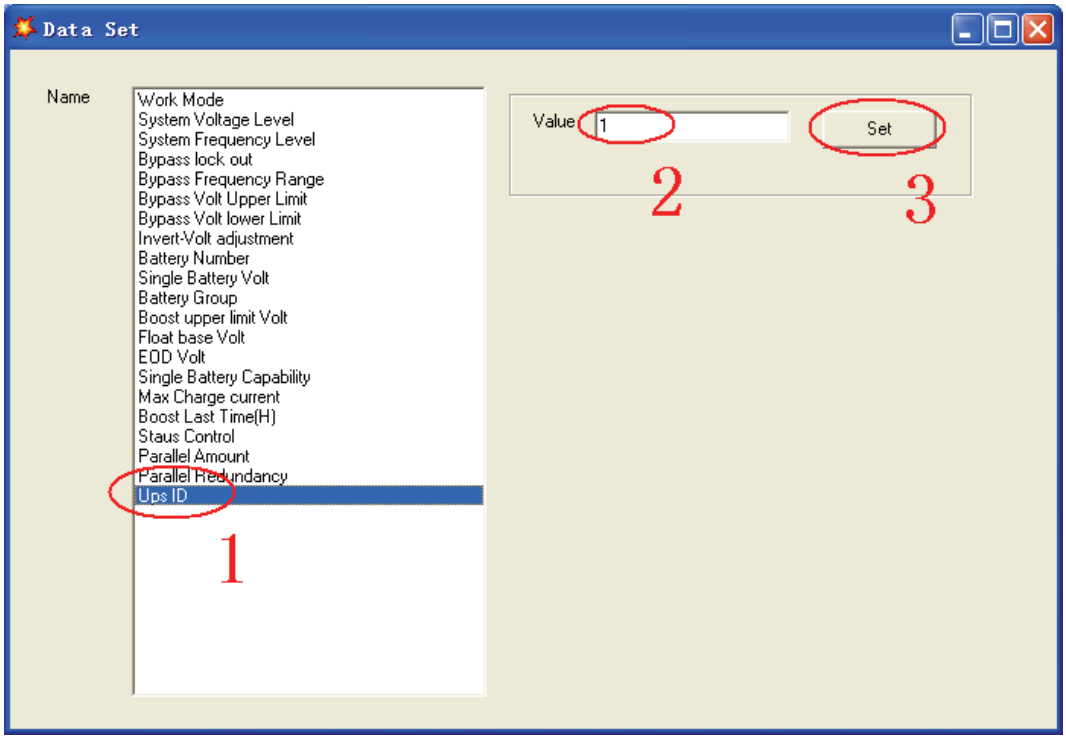

CAUTION!

After changing the parallel system ID, the connection between Muser4000 and equipment might be interrupted. If it occurs, please re-connect in accordance with the instruction described before.

CAUTION!

Parallel cable cannot be connected when setting the parallel parameters.

◆After setting the UPS needed to be paralleled, power off all the UPS. Connect all the UPS according to “parallel cable installation”, and then power on the UPS.

4.3 The LCD Display

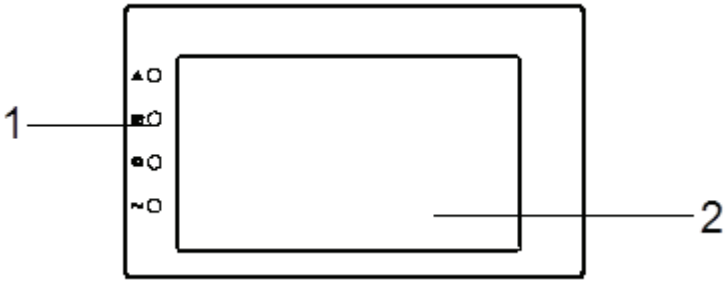

Overview of the operating panel of the UPS

（1）LED（from top to bottom: “alarm”, “bypass”, “battery”, “inverter”）

（2）LCD display

Introduction

CAUTION!

The display provides more functions than those described in this manual.

4.3.1 Home page 1, show the UPS operating flow chart, and there are the data entrance of input, output, battery.

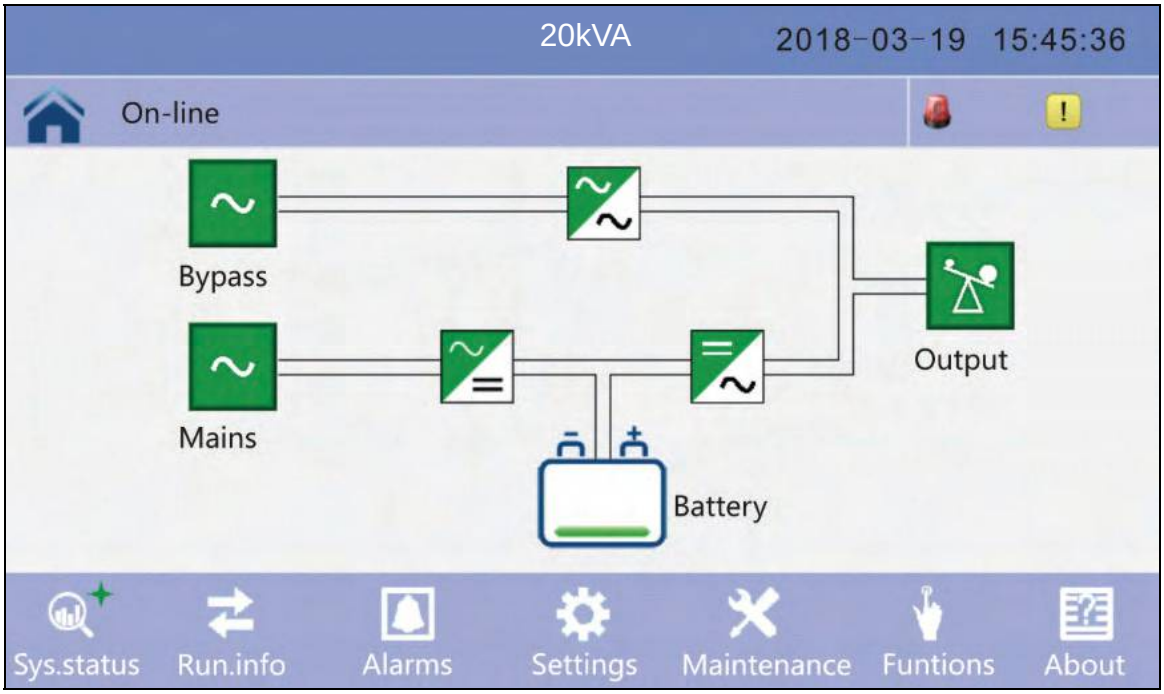

1) Click on the bypass icon to enter the bypass data window, click on the back icon return to last window and click on the homepage icon jump to main page.

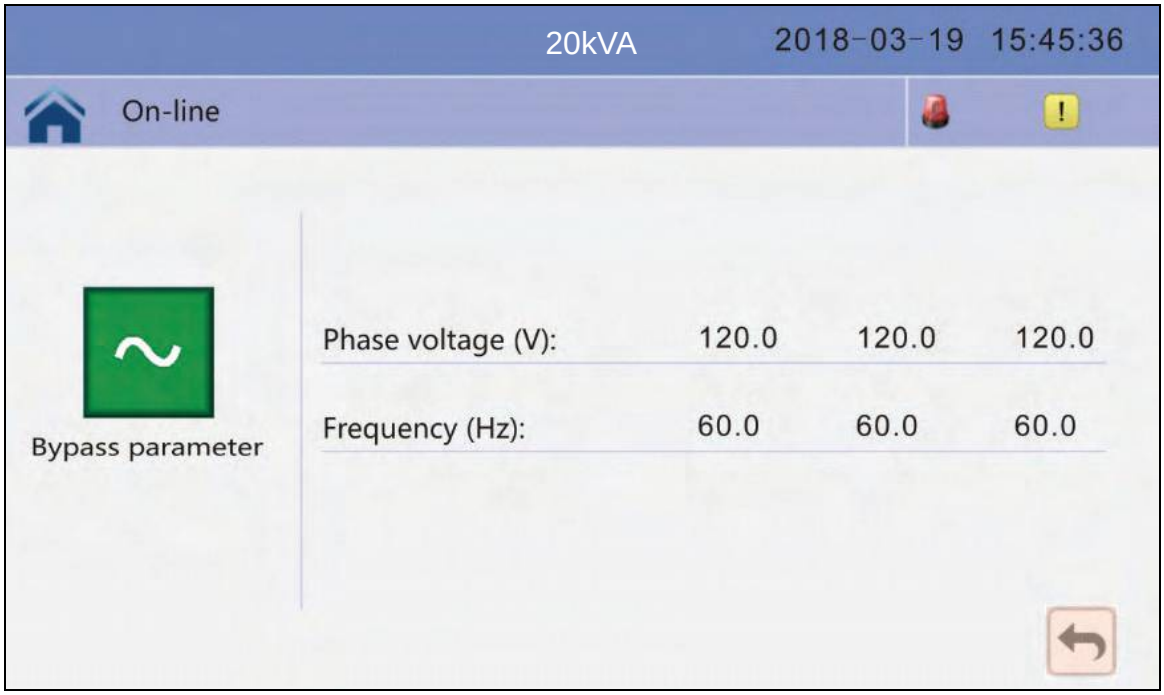

2) Click on the mains icon to enter the mains data window, click on the back icon return to last window and click on the homepage icon jump to main page.

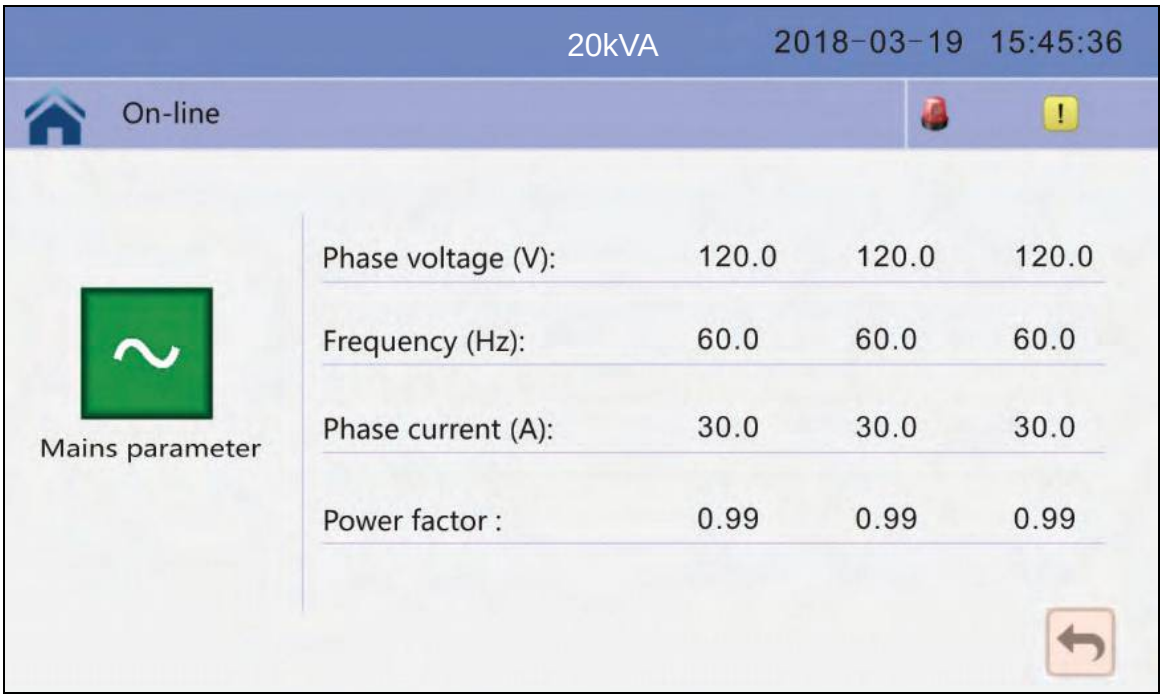

3) Click on the Load icon to enter the output data window, click on the back icon return to last window and click on the homepage icon jump to main page.

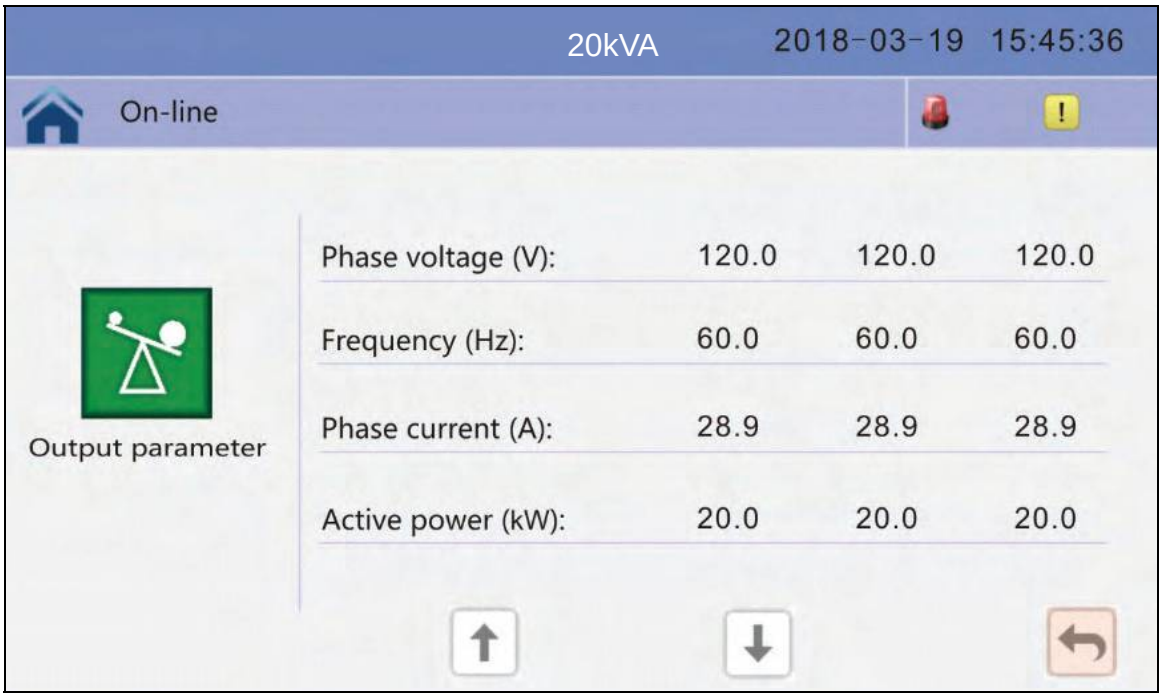

4) Click on the battery icon to enter the battery data window, click on the back icon return to last window and click on the homepage icon jump to main page.

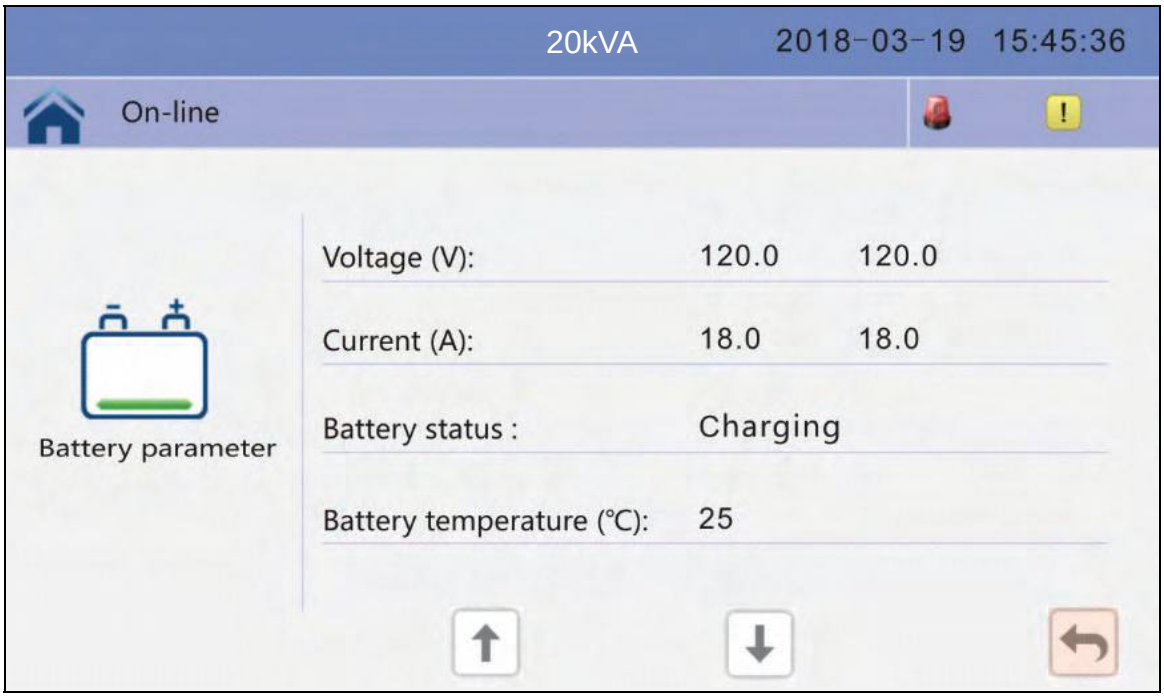

4.3.2 Click on Runn. info icon to enter the information page.

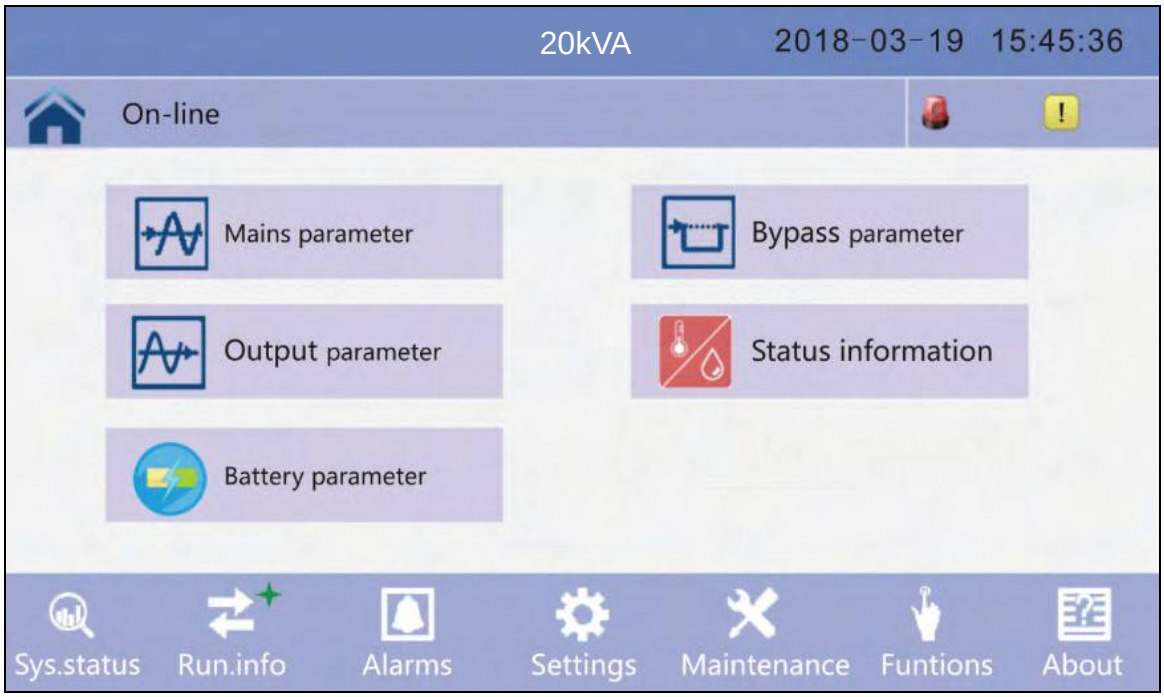

1) Click on the Run time icon to enter the status data window, can see the breaker status, click on the back icon return to last window and click on the homepage icon jump to main page.

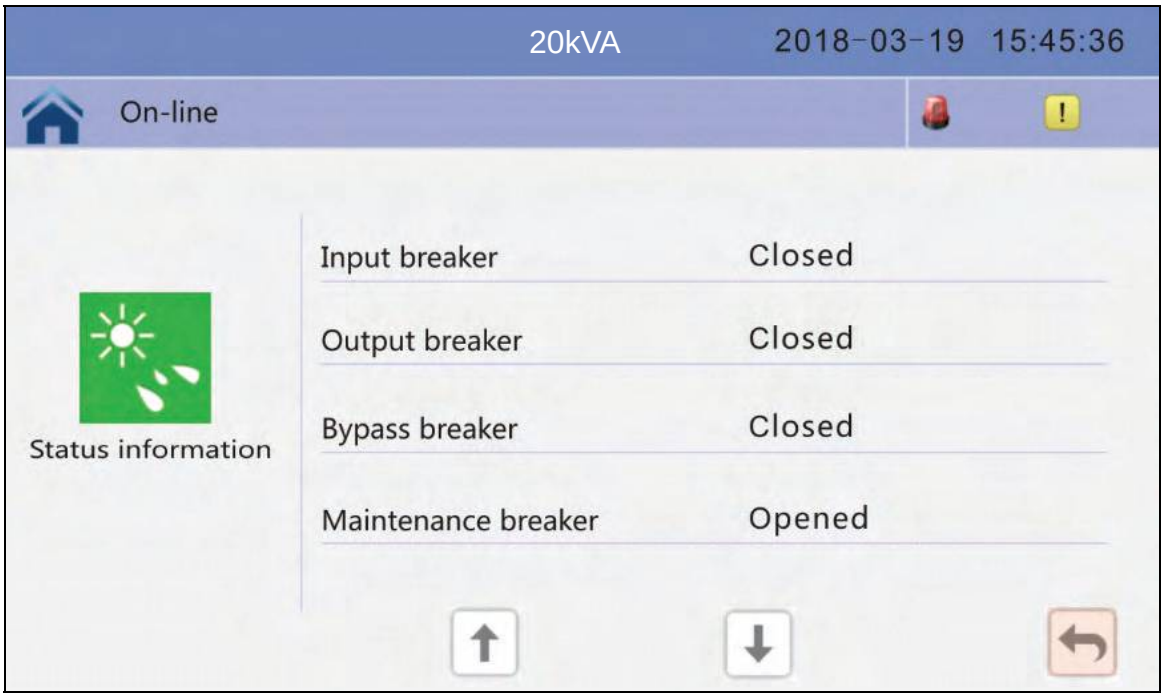

2) Click on the ENV data icon to enter the status data window, can see the temperature data after connected to temperature sensor , click on the back icon return to last window and click on the homepage icon jump to main page.

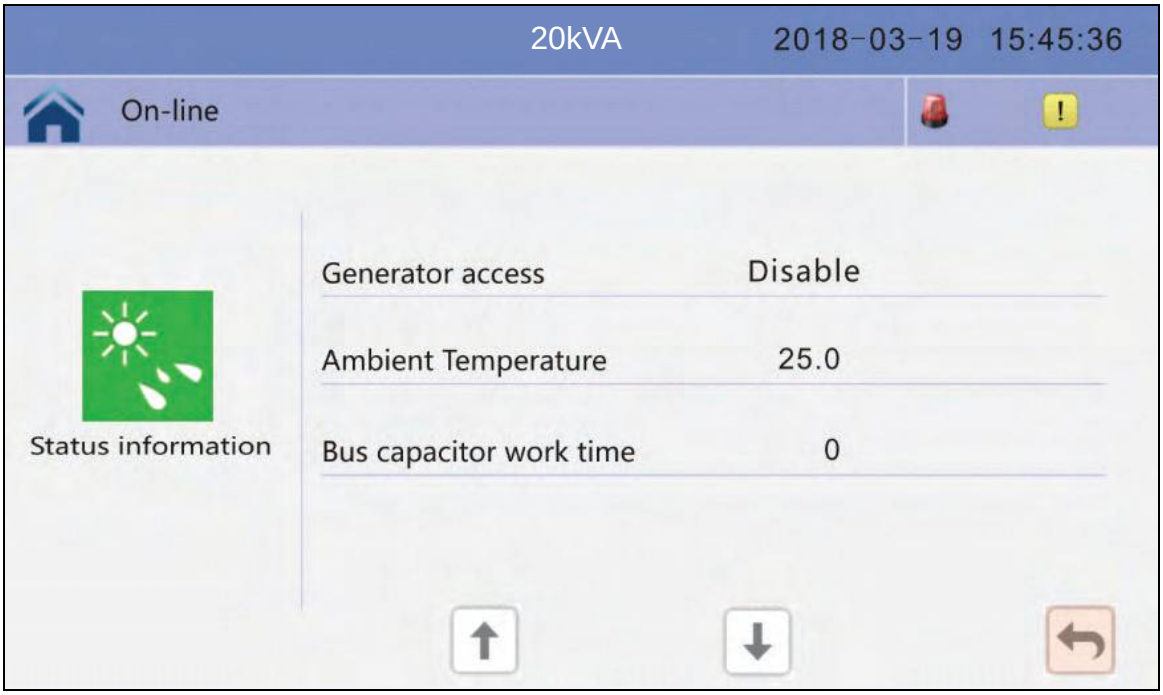

4.3.3 Click on Alarm icon to enter the alarms page.

1) Click on the active Alarm icon to enter the module data window, can see the alarm data, click on the back icon return to last window and click on the homepage icon jump to main page.

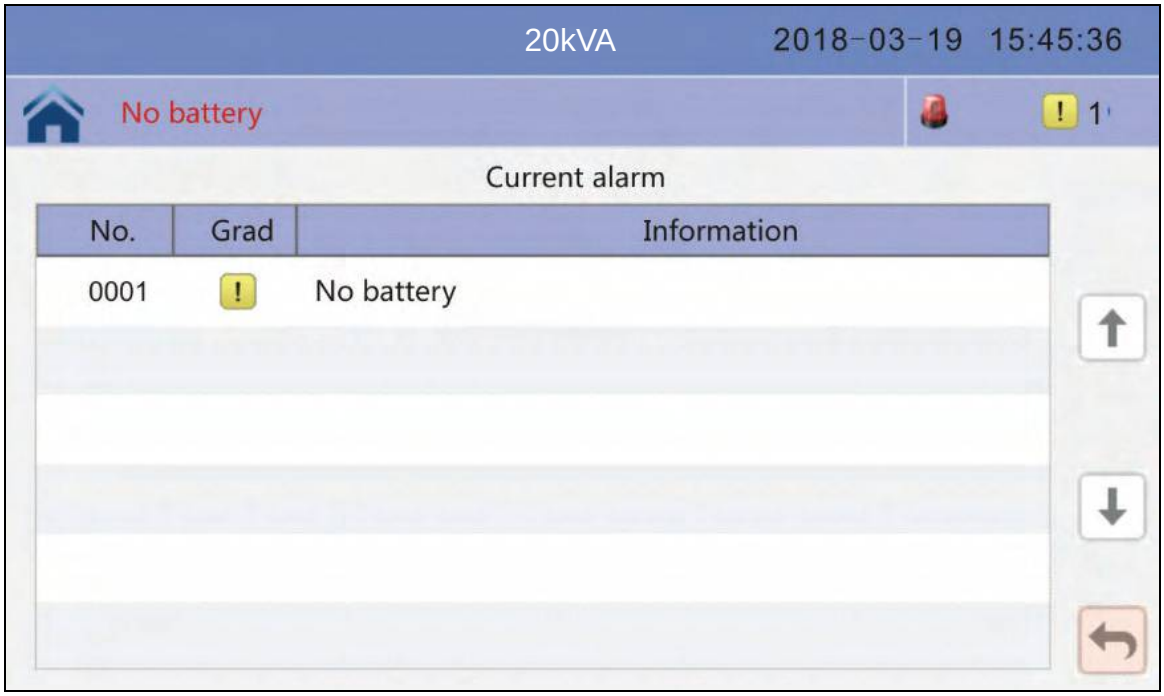

2) Click on the history icon to enter the histoty window, can see the history data, click on the back icon return to last window and click on the homepage icon jump to main page.

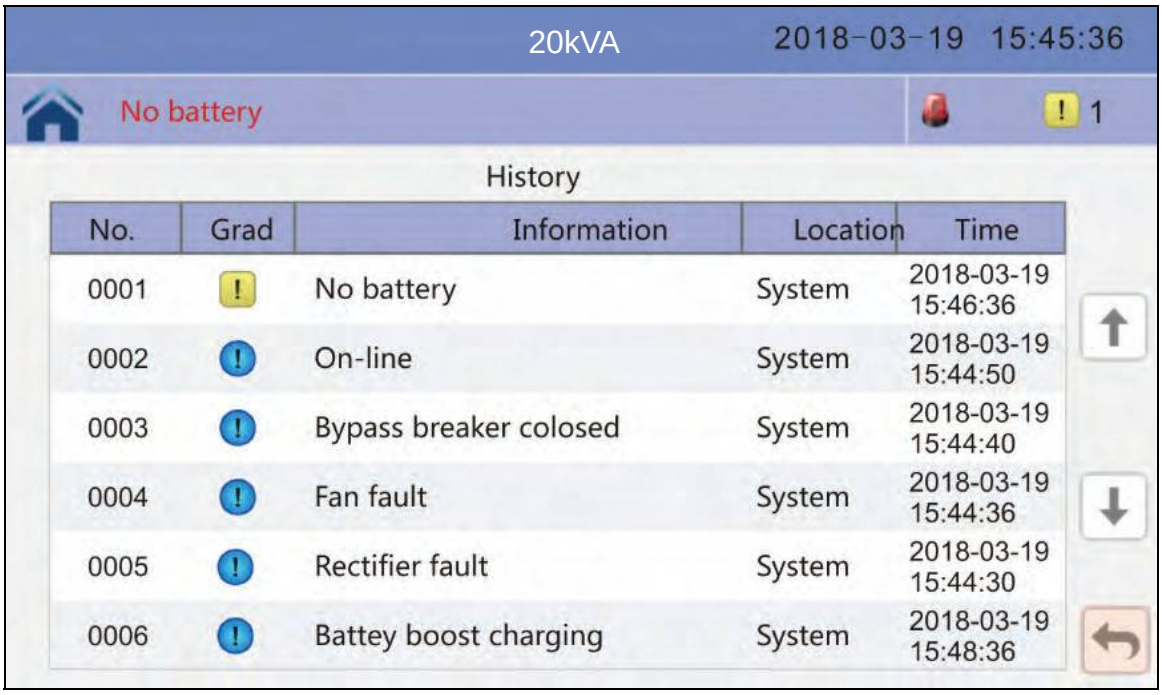

4.3.4 Click on setting icon to enter setting page, click on the back icon return to last window and click on the homepage icon jump to main page

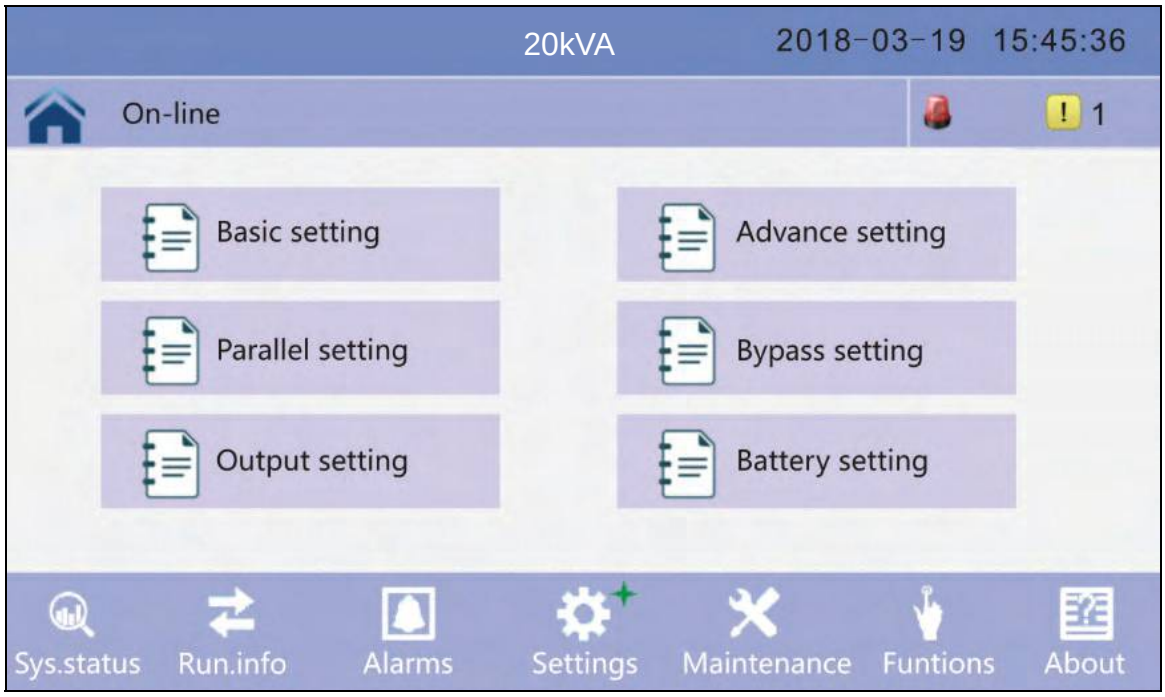

4.3.5 Click on Maintenance icon to enter setting page, click on the back icon return to last window and click on the homepage icon jump to main page

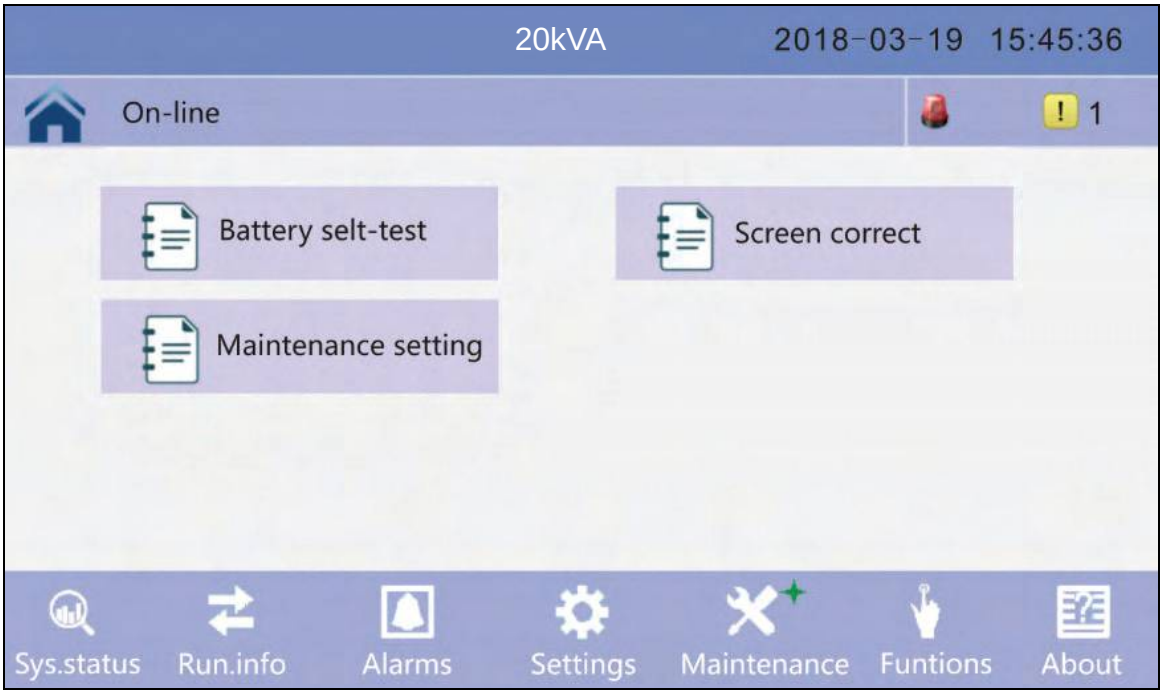

4.3.6 Click on Function icon to enter setting page, click on the back icon return to last window and click on the homepage icon jump to main page

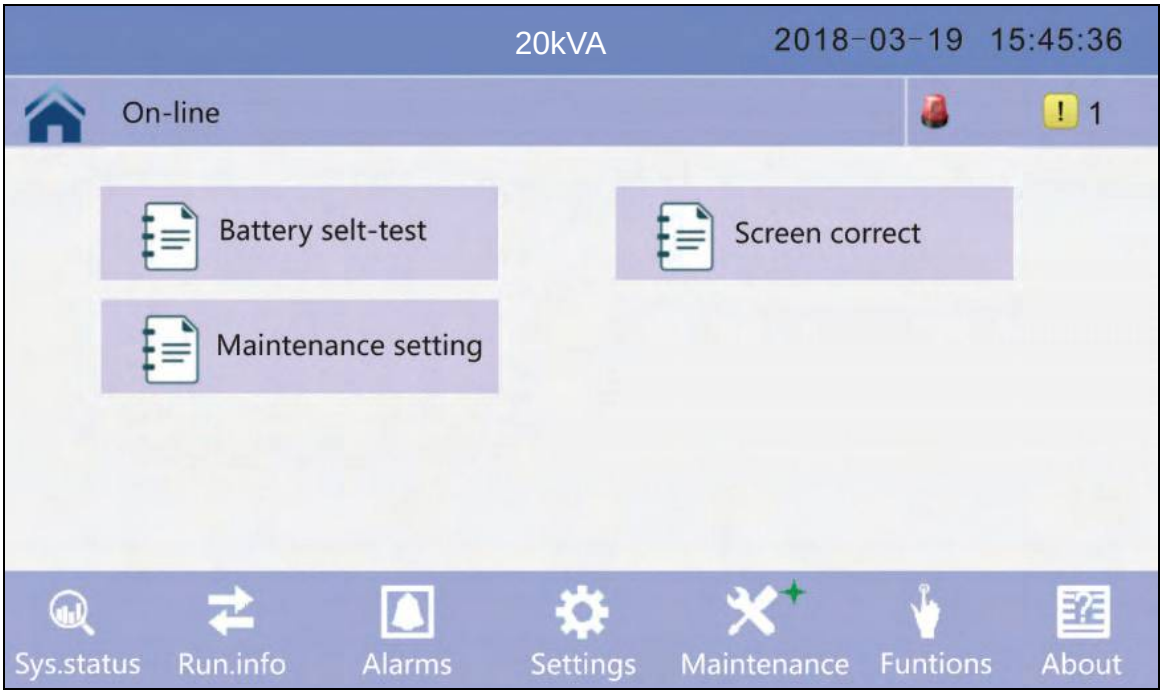

Alarm Information

Fault code (Err)	UPS Alarm Warning	Buzzer	LED
1	Rectifier Fault	Beep continuously	Fault LED lit
2	Inverter fault(Including Inverter bridge is shorted)	Beep continuously	Fault LED lit
3	Inverter Thyristor Short	Beep continuously	Fault LED lit
4	Inverter Thyristor Broken	Beep continuously	Fault LED lit
5	Bypass Thyristor Short	Beep continuously	Fault LED lit

6	Bypass Thyristor Broken	Beep continuously	Fault LED lit
7	Fuse Broken	Beep continuously	Fault LED lit
8	Parallel Relay Fault	Beep continuously	Fault LED lit
9	Fan Fault	Beep continuously	Fault LED lit
10	Reserve	Beep continuously	Fault LED lit
11	Auxiliary power 1 fault	Beep continuously	Fault LED lit
12	Initialization Fault	Beep continuously	Fault LED lit
13	P-Battery Charger Fault	Beep continuously	Fault LED lit
14	N-battery Charger Fault	Beep continuously	Fault LED lit
15	DC Bus Over Voltage	Beep continuously	Fault LED lit
16	DC Bus Below Voltage	Beep continuously	Fault LED lit
17	DC Bus Unbalance	Beep continuously	Fault LED lit
18	Soft Start Failed	Beep continuously	Fault LED lit
19	Rectifier Over Temperature	Twice per second	Fault LED lit
20	Inverter Over Temperature	Twice per second	Fault LED lit
21	Input Neutral Line Missing	Twice per second	Fault LED lit
22	Battery counter	Twice per second	Fault LED lit
23	Parallel Cable Connection Error	Twice per second	Fault LED lit
24	CAN Comm. Fault	Twice per second	Fault LED lit
25	Parallel Load Sharing Fault	Twice per second	Fault LED lit
26	Battery Over Voltage	Once per second	Fault LED blinking
27	Mains Site Wiring Fault	Once per second	Fault LED blinking
28	Bypass Site Wiring Fault	Once per second	Fault LED blinking
29	Output Shortcut	Once per second	Fault LED blinking
30	Rectifier over current Fault	Once per second	Fault LED blinking
31	Bypass Over Current	Once per second	BPS LED blinking
32	Overload	Once per second	INV or BPS LED blinking
33	No battery	Once per second	Battery LED blinking
34	Battery Under Voltage (Low Battery protection)	Once per second	Battery LED blinking
35	Battery volt warning (Battery Voltage Low)	Once per second	Battery LED blinking
36	Inner Communication Fault	Once per 2 seconds	Fault LED blinking
37	DC Component Over Limit. (Unbalance INV. DC)	Once per 2 seconds	INV LED blinking
38	Parallel Overload	Once per 2 seconds	INV LED blinking
39	Mains Volt. Abnormal	Once per 2 seconds	Battery LED lit
40	Mains Freq. Abnormal	Once per 2 seconds	Battery LED lit
41	Bypass Not Available		BPS LED blinking
42	Bypass Unable To Trace		BPS LED blinking
43	Inverter On Invalid		

4.4 Options

SNMP card: internal SNMP / external SNMP optional

- Loosen the 2 torque screws (on each side of the card).
- Carefully pull out the card. Reverse the procedure for re-installation

The slot called SNMP supports the MEGAtec protocol. We advise that NetAgent II-3 port is also a tool to remotely monitor and manage any UPS system

NetAgent II-3Ports supports the Modem Dial-in (PPP) function to enable the remote control via the internet when the network is unavailable.

In addition to the features of a standard NetAgent Mini, NetAgent II has the option to add NetFeeler Lite to detect temperature, humidity, smoke and security sensors. Thus, making NetAgent II a versatile management tool. NetAgent II also supports multiple languages and is setup for web-based auto language detection.

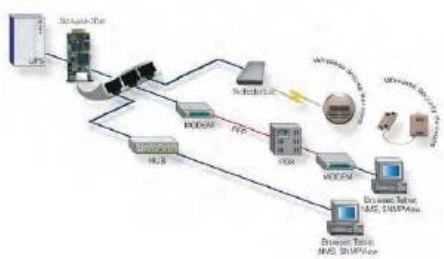

Typical topology of the UPS Network Management

Relay card

A 10-pin terminal is supported to offer the signals of Bypass, Utility Failure, Inverter On, Battery Low, UPS fault, UPS Alarm, and UPS Shutdown.

The relay communication card contains six dry contact outputs and one dry input. The inputs and outputs are factory programmed according to functions listed in the table

Table: Relay Contacts (communication card)

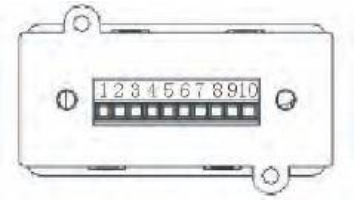

Port		Function
1	Output	Utility Failure
2		Battery Low
3		Battery Low
4		On Bypass
5		UPS Fault
6		Inverter On
7		Main's voltage abnormal
8		COM
9	Input	ON
10		OFF

CAUTION!

The output contacts numbers for a second relay board installed will be 1 to 7. Contacts are NO (normally open) type.

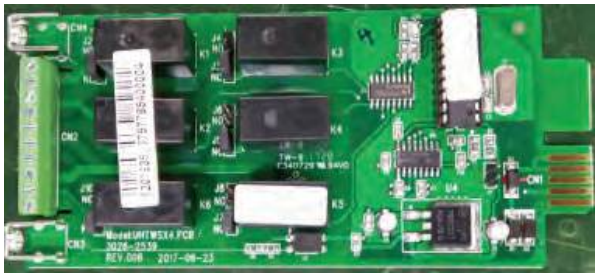

Appendix 1 Specifications

Model			10KVA(S/H)	15KVA(S/H)	20KVA(S/H)
Capacity			10KVA 9KW	15KVA 13.5KW	20KVA 18KW
Input	Phase		3 Phase 4 Wires and Ground		
	Rated Voltage		380/400/415Vac		
	Voltage Range		208~478Vac		
	Frequency Range		45-55Hz at 50Hz/54-66Hz at 60Hz (auto sensing)		
	Power Factor		≥0.99		
	Current THDi		≤3%(100% nonlinear load)		
	Bypass Voltage Range		Max. voltage: 220Vac: +25%(optional +10%,+15%,+20%) 230Vac: +20%(optional +10%,+15%) 240Vac: +15%(optional +10%) Min. voltage: -45% (optional -10%, -20%, -30%) Frequency protection range: ±10%		
	Generator Input		Support		
Output	Phase		3 Phase 4 Wires and Ground		
	Rated Voltage		380/400/415Vac		
	Power Factor		0.9		
	Voltage Regulation		±1%		
	Frequency	Utility Mode	±1%, ±2%, ±4%, ±5%, ±10% of the rated frequency(optional)		
		Battery Mode	(50/60±0.2%)Hz		
	Crest Factor		3:1		
	THD		≤2% with linear load ≤5% with non linear load		
Battery	Voltage		Standard unit: ±120Vdc (20pcs 12V9AH); (2x20pcs 12V9AH optional) Long run unit : ±96V/±108V/±120 Vdc (16/18/20pcs optional)	Standard unit: ±120Vdc (2x20pcs 12V9AH); Long run unit Optional Voltage: ±96V/±108V/±120Vdc (16/18/20pcs optional)	
	Charge Current(A) (charge current can be set according to battery capacity installed)		Standard unit: 1.35A (2.7A optional) Long run unit: Max. current 10A	Standard unit: 2.7A Long run unit: Max. current 10A	
Transfer Time			Utility to Battery : 0ms; Utility to bypass: 0ms		
Protection	Overload	AC Mode	Load≤110%: last 60min,≤125%: last 10min,≤150%: last 1min, >150% change to bypass immediately		
		Bat. Mode	Load≤110%: last 10min, ≤125%: last 1min, ≤150%: last 5S, >150% shut down UPS immediately		
		Bypass Mode	Breaker 20A	Breaker 32A	Breaker 40A

	Short Circuit	120A peak	140A peak	
	Overheat	Line Mode: Switch to Bypass; Backup Mode: Shut down UPS immediately		
	Battery Low	Alarm and Switch off		
	Self-diagnostics	Upon Power On and Software Control		
	EPO(optional)	Shut down UPS immediately		
	Battery	Advanced Battery Management		
	Noise Suppression	Complies with EN62040-2		
Alarms	Audible & Visual	Line Failure, Battery Low, Overload, System Fault		
Display	Status LED & LCD	Line Mode, Bypass Mode, Battery Low, Battery Bad, Overload & UPS Fault		
	Reading On the LCD	Input Voltage, Input Frequency, Output Voltage, Output Frequency, Load Percentage, Battery Voltage & Inner Temperature		
Communication Interface		USB, RS485, Parallel (optional), Coupler dry contact, Intelligent slot, SNMP card (optional), Relay card (optional)		
Environment	Operating Temperature	0℃～40℃		
	Storage Temperature	-25℃～55℃		
	Humidity	0～95% non condensing		
	Altitude	< 1500m.When>1500m,lower the rated power for use		
Other	Dimensions(D×W×H)	828x250x868		
	Weight (Kg)	115/57	170/63	171/64
Safety Conformance		CE,EN/IEC 62040-2,EN/IEC 62040-1-1		

Model			**30KVA(S/H)**	**40KVA(H)**
Capacity			30KVA 27KW	40KVA 36KW
Input	Phase		3 Phase 4 Wires and Ground	
	Rated Voltage		380/400/415Vac	
	Voltage Range		208~478Vac	
	Frequency Range		45-55Hz at 50Hz/54-66Hz at 60Hz (auto sensing)	
	Power Factor		≥0.99	
	Current THDi		≤3%(100% nonlinear load)	
	Bypass Voltage Range		Max. voltage: 220Vac: +25%(optional +10%,+15%,+20%) 230Vac: +20%(optional +10%,+15%) 240Vac: +15%(optional +10%) Min. voltage: -45% (optional -10%, -20%, -30%) Frequency protection range: ±10%	
	Generator Input		Support	
Output	Phase		3 Phase 4 Wires and Ground	
	Rated Voltage		380/400/415Vac	
	Power Factor		0.9	
	Voltage Regulation		±1%	
	Frequency	Utility Mode	±1%, ±2%, ±4%, ±5%, ±10% of the rated frequency(optional)	

		Battery Mode	(50/60±0.2%)Hz	
	Crest Factor		3:1	
	THD		≤2% with linear load ≤5% with non linear load	
Battery	Voltage		Standard unit: ±120Vdc (3x20pcs 12V9AH); Long run unit Optional Voltage: ±96V/±108V/±120Vdc (16/18/20pcs optional)	Long run unit Optional Voltage: ±192V/±204V/±216V/±228V/±240VDC (32 /34/36/38/40PCS)
	Charge Current(A) (charge current can be set according to battery capacity installed)		Standard unit: 4.5A Long run unit: Max. current 10A	Long run unit: Max. current 10A
Transfer Time			Utility to Battery : 0ms; Utility to bypass: 0ms	
Protection	Overload	AC Mode	Load≤110%: last 60min, ≤125%: last 10min, ≤150%: last 1min, >150% change to bypass immediately	
		Bat. Mode	Load≤110%: last 10min, ≤125%: last 1min, ≤150%: last 5S, >150% shut down UPS immediately	Load≤110%: last 60min, ≤125%: last 10min, ≤150%: last 1min, >150% shut down UPS immediately
		Bypass Mode	Breaker 63A	Breaker 80A
	Short Circuit		164A Peak	
	Overheat		Line Mode: Switch to Bypass; Backup Mode: Shut down UPS immediately	
	Battery Low		Alarm and Switch off	
	Self-diagnostics		Upon Power On and Software Control	
	EPO(optional)		Shut down UPS immediately	
	Battery		Advanced Battery Management	
	Noise Suppression		Complies with EN62040-2	
Alarms	Audible & Visual		Line Failure, Battery Low, Overload, System Fault	
Display	Status LED & LCD		Line Mode, Bypass Mode, Battery Low, Battery Bad, Overload & UPS Fault	
	Reading On the LCD		Input Voltage, Input Frequency, Output Voltage, Output Frequency, Load Percentage, Battery Voltage & Inner Temperature	
Communication Interface			USB, RS485, Parallel (optional), Coupler dry contact, Intelligent slot, SNMP card (optional), Relay card (optional)	
Environment	Operating Temperature		0℃～40℃	
	Storage Temperature		-25℃～55℃	
	Humidity		0～95% non condensing	
	Altitude		< 1500m.When>1500m,lower the rated power for use	
Other	Dimensions(D×W×H)		828x250x868	
	Weight (Kg)		223/71	73
Safety Conformance			CE,EN/IEC 62040-2,EN/IEC 62040-1-1	

Appendix 2 Problems and Solution

In case the UPS cannot work normally, it might be wrong in installation, wiring or operation. Please check these aspects first. If all these aspects are checked without any problem, please consult with local agent right away and provide below information.

（1）Product model name and serial number.

（2）Try to describe the fault with more details, such as LCD display info, LED lights status, etc.

Read the user manual carefully, it can help a lot for using this UPS in the right way. Some FAQ (frequently asked questions) may help you to troubleshoot your problem easily.

No.	Problem	Possible reason	Solution
1	Utility is connected but the UPS cannot be powered ON.	Input power supply is not connected; Input voltage low; The input switch of the UPS is not switched on.	Measure if the UPS input voltage/frequency is within the window. Check if UPS input is switched on
2	Utility normal but Utility LED does not light on, and the UPS operates at battery mode	The input breakers of the UPS are not switched on; input cable is not well connected	Switch on the input breaker; Make sure the input cable is well connected.
3	The UPS does not indicate any failure, but output do not have voltage	Output cable does not well connected; Output breaker do not switch on	Make sure the output cable is well connected; Switch on the output breaker.
4	Utility LED is flashing	Utility voltage exceeds UPS input range.	If the UPS operates at battery mode, please pay attention to the remaining backup time needed for your system.
5	Battery LED is flashing but no charge voltage and current	Battery breaker does not switch on, or batteries are damaged, or battery is reversely connected. Battery number and capacity are not set correctly.	Switch on the battery breaker. If batteries are damaged, need to replace whole group batteries, Connect the battery cables correctly; Go to LCD setting of the battery number and capacity, set the correct data.
6	Buzzer beeps every 0.5 seconds and LCD display “output overload”	Overload	Remove some load
7	Buzzer long beeps, LCD display “29”fault code	The UPS output is in short circuit	Make sure the load is not in short circuit, and then restart the UPS.
8	The UPS only works on bypass mode	The UPS is set to ECO mode, or the transfer times to bypass mode are limited.	Set the UPS working mode to UPS type(non-parallel) or to reset the times of transferring to bypass or re-start the UPS
9	Cannot Black start	Battery switch is not properly closed: Battery fuse is not open: Or Battery low: Battery quantity set wrong; Power breaker in the rear panel not switch ON.	Close the battery switch: Change the fuse: Recharge the battery: Power ON the UPS with AC to set the battery quantity &quantity; Switch on the power breaker.

10	Buzzer beeps continuously and LCD indicates 1,3,5,9,15, etc fault codes	UPS is out of order	Consult with your local agent for repair

Appendix 3 USB communication port definition

Definition of port:

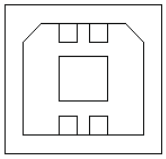

Connection between PC USB port and UPS USB port.

PC USB port	UPS USB port	Description
Pin 1	Pin 1	PC : +5V
Pin 2	Pin 2	PC : DPLUS signal
Pin 3	Pin 3	PC :DMINUS signal
Pin 4	Pin 4	Signal ground

Available function of USB

- Monitor UPS power status.
- Monitor UPS alarm info.
- Monitor UPS running parameters.
- Timing off/on setting.

Communication data format

Baud rate ---------- 9600bps

Byte length ---------- 8bit

End bit ---------- 1bit

Parity check ---------none

CAUTION!

USB, RS232 and RS485 interface cannot be used at the same time, you can only use one of them at one time.

Appendix 4 RS232 communication port definition

Definition of Male port:

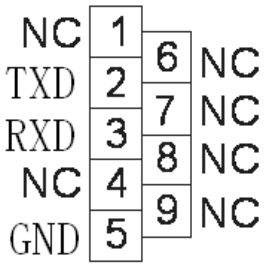

Connection between PC RS232 port and UPS RS232 port

PC RS232 port	UPS RS232 port	
Pin 2	Pin 2	UPS send,PC receive
Pin 3	Pin 3	PC send,UPS receive
Pin 5	Pin 5	ground

Available function of RS232

- ◆ Monitor UPS power status.
- ◆ Monitor UPS alarm info.
- ◆ Monitor UPS running parameters.
- ◆ Timing off/on setting.

RS-232 communication data format

Baud rate ---------- 9600bps

Byte length ---------- 8bit

End bit ---------- 1bit

Parity check ---------none

CAUTION!

USB, RS232 and RS485 interface cannot be used at the same time, you can only use one of them at one time.

Appendix 5 RS485 communication port definition

Definition of port:

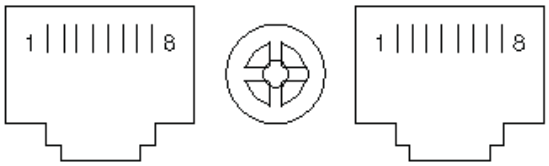

Connection between the Device's RS485 port and UPS RS485 port.

device(RJ45)	UPS(RJ45)	Description
Pin 1/5	Pin 1/5	485+ "A"
Pin 2/4	Pin 2/4	485 - "B"
Pin7	Pin7	+12Vdc
Pin8	Pin8	GND

Available function of RS485

- ◆ Monitor UPS power status.
- ◆ Monitor UPS alarm info.
- ◆ Monitor UPS running parameters.
- ◆ Timing off/on setting.
- ◆Battery environment temperature monitoring.
- ◆Charging voltage modulation depending on batteries temperature

CAUTION!

USB, RS232 and RS485 interface cannot be used at the same time, you can only use one of them at one time.

RS485 port pin7 is 12Vdc!

Appendix 6 BAT_T communication port definition

Definition of port:

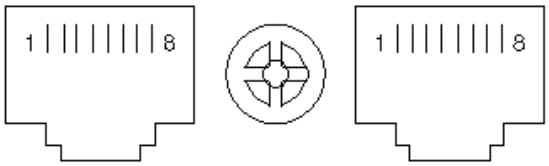

Connection between the Temperature senator RJ45 port and UPS RJ45 port.

Temperature senator（RJ45)	UPS BAT_T（RJ45）	Description
Pin 1/5	Pin 1/5	TX
Pin 2/4	Pin 2/4	RX
Pin 7	Pin 7	12V
Pin 8	Pin 8	GND

Available function of BAT_T

◆Battery environment temperature monitoring.

◆Charging voltage modulation depending on batteries' temperature.

Appendix 7 Dry contact port communication port definition

Definition of Male port:

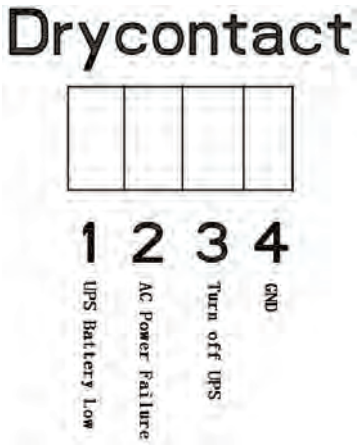

Instruction:

UPS	Instruction
Pin1	UPS Battery Low
Pin2	AC Power Failure
Pin3	Turn off UPS
Pin4	Common GND

Function description:

- ◆ Monitor UPS status;
- ◆ Monitor UPS battery status;
- ◆ Shutdown UPS.

Appendix 8 REPO instruction

Definition of port:

Connection diagram:

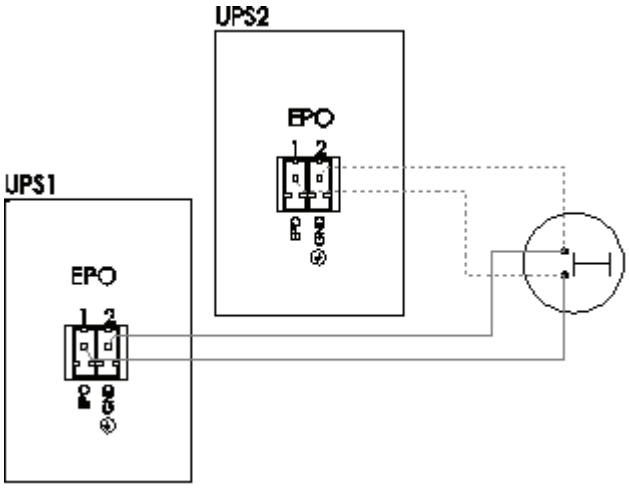

Connection between the button and UPS REPO port.

Button	UPS REPO	Description
Pin 1	Pin 1	EPO
Pin 2	Pin 2	GND

◆A remote emergency stop switch can be installed in a remote location and connection through simple wires to the REPO connector.

◆The remote switch can be connected to several UPS in a parallel architecture allowing the user to stops all units at once.