MAIN FEATURES

Housed in a corrosion-resistant stainless steel/cold-rolled steel box and manufactured to a high standard, these telephones offer increased resistance to vandalism, and ensure that the primary function of communication is maintained at all times.

Housing has a grounding device and is completely electrically isolated from the internal circuit, with a certain electromagnetic shielding effect, and the voice is clear and loud during the call, without whistling back. Armored "cord" provides additional resistance to vandalism or heavy industrial use.

The series telephones are designed to meet the needs of clients who experience losses due to vandalism. Ideal for parking lots, prisons, airports, railway, metro, ATMs machines, platforms, hospitals, police stations, shopping mall, stadiums, etc.

- Full metal keypad (12keys)
- ABS material handset with noise-cancelling microphone and 83 cm armored cord
- The handset supports hearing aid compatibility (HAC)
- Magnetic reed hook-switch
- Grey; other colors available upon special request
- Wall-mounted design, simple installation

TECHNICAL SPECIFICATIONS

Analog Specification	
Power supply	Drawn from telephone line
Operating voltage	24 VDC to 65 VDC
Operating current	20 mA DC to 100 mA DC
Ringer operating voltage	48 VAC to 90 VAC (calling frequency 21 to 54 Hz)
Ringing volume	80 dB (A) @ 1 meter
Dialing method	PD or DTMF mode can be set via the menu. DTMF mode in accordance with ITU-T recommendation Q.23
Lightning / Transients	Protection to ITU-T K.21 enhanced levels
Programming	It can be programmed remotely via DTMF tones or the keypad
Technical Specifications	
Compatible with all the standard PABX systems	
Remote programming allows you to manage your network from a central location	
Programmable auto hang-up timer	
Supports automatic dialing with delay after picking up the phone	
Supports scheduled dialing to the central control phone to detect whether the phone is working properly	
Supports one relay to remotely control external devices	
Can be adapted according to the model of the Analog PABX to support the sequential calling function	
Phone line powered	
Operating temperature -40˚C to 65˚C / Storage temperature -40°C to 75°C	
M.T.B.F. exceeds 50,000 hours under normal operating conditions	

OPTIONAL ACCESSORIES

JR-BS-01
Acousto-optical Alarm

JR-LP-02
LED Beacon Light

JR-HSA-10/20/25/30/35
Broadcast Horn

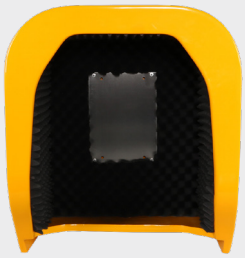

JR-TH-01
Acoustic Hood

APPLICATIONS

1. Analog telephone connects to the PABX and call outside lines through the PSTN.

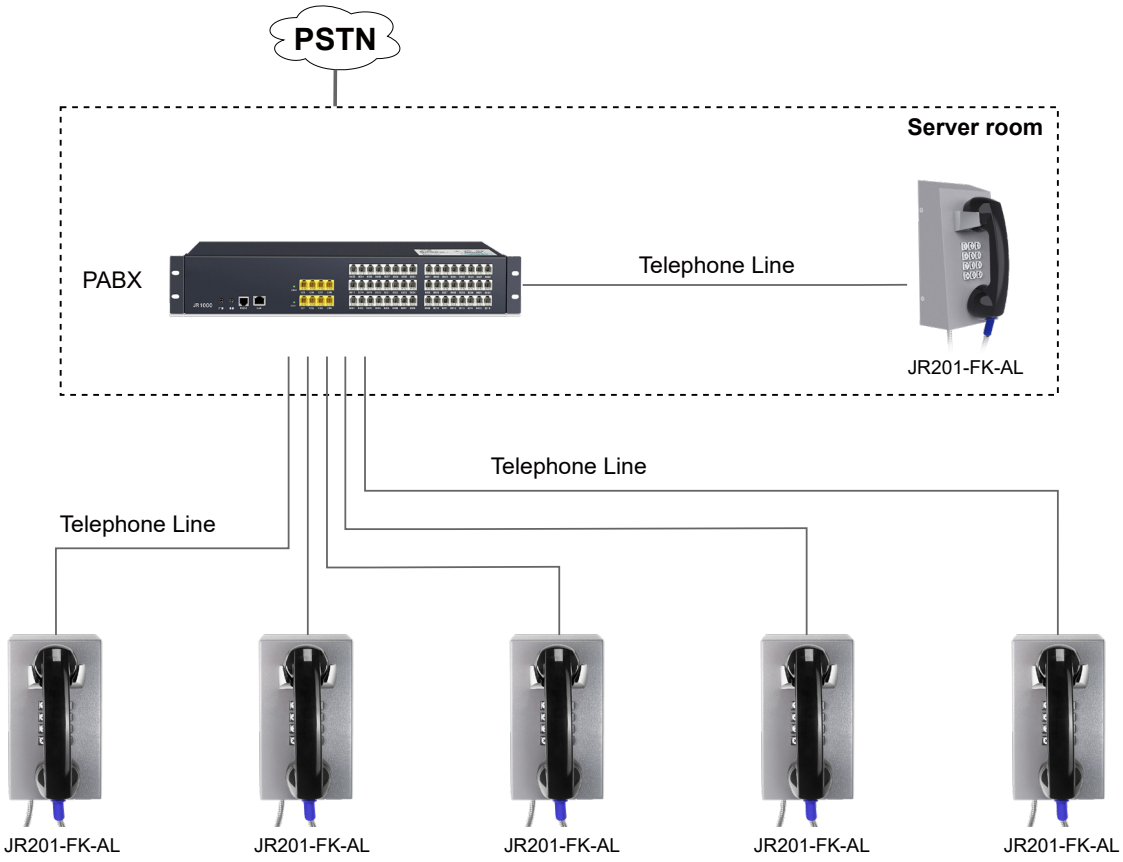

2. Analog telephone connects to voice gateway, converts analog signal to SIP signal, and is applied in SIP-based systems.

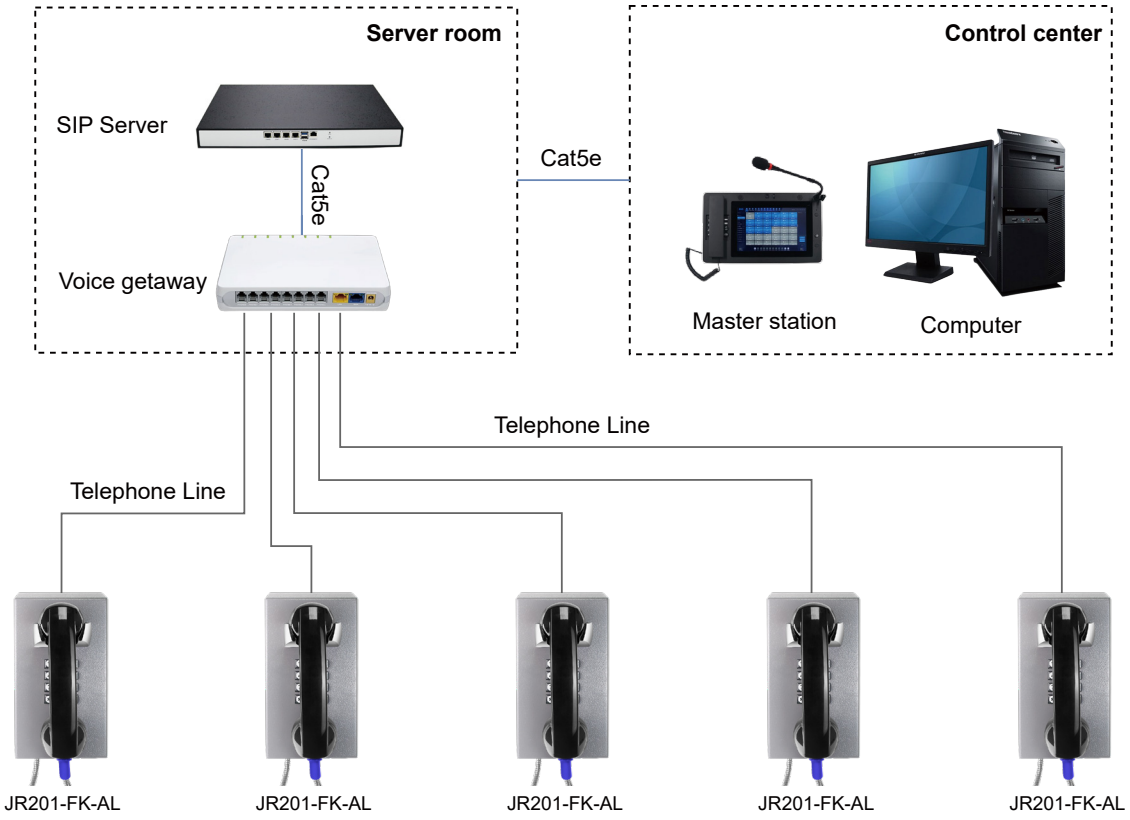

APPLICATION SCENARIOS

Metro

Airport

Bus station

Business center

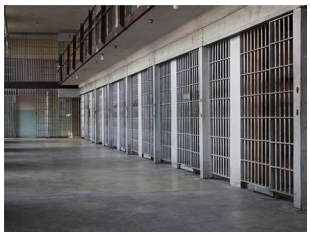
Prison

Hospital

Bank

School

DIMENSIONS

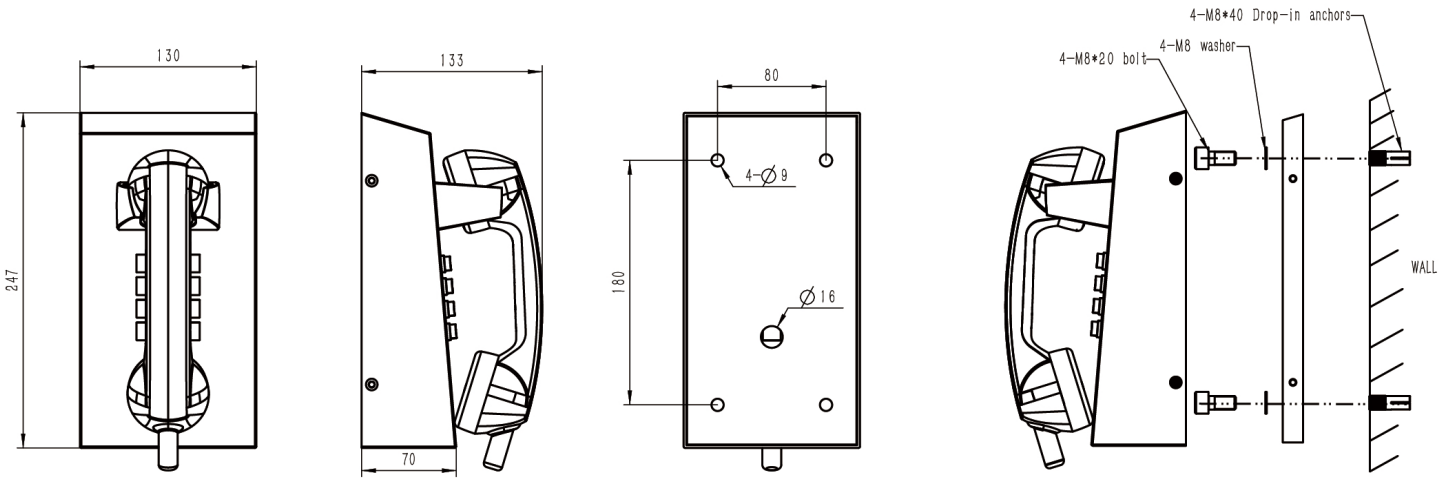

Package	
Unit size	247*130*133 (mm)
Shipping dimensions	340*220*165 (mm)
Packaging materials	Foam padding, carton
Weight	Net weight: 3 kg / Gross weight: 4 kg

Add: 6/F, A1, Xingyi industrial city, Baishixia Est., Fuyong, Bao'an, Shenzhen, China
Email: sales@jrteck.com
Tel: +86 - 755 - 27322952
Web: www.jrteck.com