NEBBIA

Service Manual –

This manual is meant for authorized Formula Service Centers.
The manual contains information regarding the complete servicing of the Nebbia.



Index

Important Information and Maintenance Intervals: 3
Parts list 4
Exploded View 5
Required Tools 6
Air Seal Replacement (60h) 7
Complete Maintenance (125h) 10
Disassembly procedure 10
Replacement of body shock o-rings (14, 41) and stem (30) assembly 14
Extension needle o-rings replacement (29) 14
Rebound adjuster o-ring replacement (33) 15
O-ring lock-out replacement (35) 15
CTS o-rings replacement (59, 60) 16
Cartridge cap o-rings replacement (5) 16
Stem components assembly 17
Bladder assembly 19
Air sleeve seals replacement (2) 20

Important Information and Maintenance Intervals:

IMPORTANT	
	Products used repeatedly in extreme conditions will require more frequent servicing. The use of high-pressure washing methods, non-original spare parts and non-recommended solvents and lubricants reduces the lifespan of our products.

IMPORTANT	
	Formula recommends only ORIGINAL spare parts and lubricant products. Formula recommends consulting servicing technicians for these activities.

SAFETY INFORMATION	
Formula HSE Health-Safety-Environment 	Always wear nitrile gloves and safety glasses when working on the shock absorber. Ensure correct disposal of waste materials and liquids. Always ensure the shock absorber is fully depressurized when specified in the manual. Servicing the shock absorber whilst pressurized can cause severe or fatal injuries.

To keep the rear shock absorber efficient during normal usage and ensure proper maintenance, follow the maintenance intervals specified by Formula:

Procedure	Before and after any use	Every 16 Hrs 1 Month	Every 35 Hrs 3 Months	Every 60 Hrs 6 Months	Every 125 Hrs 1 Year
Visual inspection	X				
Wash with water and mild soap	X				
Check sag and air pressure		X			
Check piggyback reservoir pressure			X		
Air seal replacement				X	
Oil change and complete inspection					X

- Items marked with ■ in the exploded view are part of the Kit 60h
- Items marked with ■ in the exploded view are part of the Kit 125h

Spare Parts List

Description	Position	Part Number
CAP VALVE WITH RING	1	SB-T100-05
Air Sleeve - Stroke 45 mm	2	AM-S046-05
Air Sleeve - Stroke 55 mm	2	AM-S045-05
Air Sleeve - Stroke 65 mm	2	AM-S038-05
Air Sleeve - Stroke 75 mm	2	AM-S047-05
SUPPORT FOR NEGATIVE WAVE SPRING	4	AM-D031-00
CARTRIDGE CAP KIT	5	AM40047-00
BLEED SCREW KIT	9+9A	FD40274-00
CARTRIDGE - Stroke 45 mm	12	AM-C059-06
CARTRIDGE - Stroke 55 mm	12	AM-C057-06
CARTRIDGE - Stroke 65 mm	12	AM-C049-06
CARTRIDGE - Stroke 75 mm	12	AM-C060-06
PIGGYBACK CAP KIT	13+13A	AM40060-00
BLADDER CAP	16	AM-T011-05
NUT OF HYDRAULIC PISTON	17	AM-D004-05
KIT ADJUSTMENT SEPARATION	18-19-20-21	AM40048-00
REBOUND SHIM STACK	22	060023000
AIR SHOCK PISTON KIT	23	AM40049-00
COMPRESSION SETTING KIT	24-25	AM40050-00
PISTON SPACER	26	AM-D023-05
PISTON PIN	27	AM-P055-10
SUPPORT FOR BOTTOM-OUT BUMPER	28	AM-L025-01
EXTENSION NEEDLE - Stroke 45	29	AM-T034-05
EXTENSION NEEDLE - Stroke 55	29	AM-T031-05
EXTENSION NEEDLE - Stroke 65	29	AM-T029-05
EXTENSION NEEDLE - Stroke 75	29	AM-T035-05
STEM - Stroke 45	30	AM-T032-06
STEM - Stroke 55	30	AM-T030-06
STEM - Stroke 65	30	AM-T028-06
STEM - Stroke 75	30	AM-T033-06
REBOUND KNOB KIT	31+32	AM40061-00
EXTENSION ADJUSTER	33	AM-R023-06
LOCK OUT LEVER KIT	31+34	AM40062-00
LOCKOUT PIN	35	AM-P052-05
EXTERNAL RESERVOIR (PIGGYBACK) - Stroke 45, 55 mm	44	AM-C054-05
EXTERNAL RESERVOIR (PIGGYBACK) - Stroke 65 mm	44	AM-C053-05
EXTERNAL RESERVOIR (PIGGYBACK) - Stroke 75 mm	44	AM-C061-05
AIR VALVE BODY + OR KIT	45+46	AM40063-00
STANDARD BODY SHOCK KIT	47	AM40051-00
TRUNNION BODY SHOCK KIT	47	AM40052-00
REBOUND PIN	48	AM-R024-05
LOCKOUT ADJUSTER	54	AM-R025-01
KIT - CTS ORANGE (MEDIUM)	59	AM40041-00
KIT - CTS GREEN (FIRM)	59	AM40042-00
KIT - CTS GOLD (SOFT)	59	AM40043-00
CTS KNOB KIT	31+61	AM40027-00
60H MAINTENANCE KIT		AM40055-00
125H MAINTENANCE KIT - Stroke 45, 55 mm		AM40057-00
125H MAINTENANCE KIT - Stroke 65 mm		AM40058-00
125H DH MAINTENANCE KIT - Stroke 75 mm		AM40059-00

Exploded View

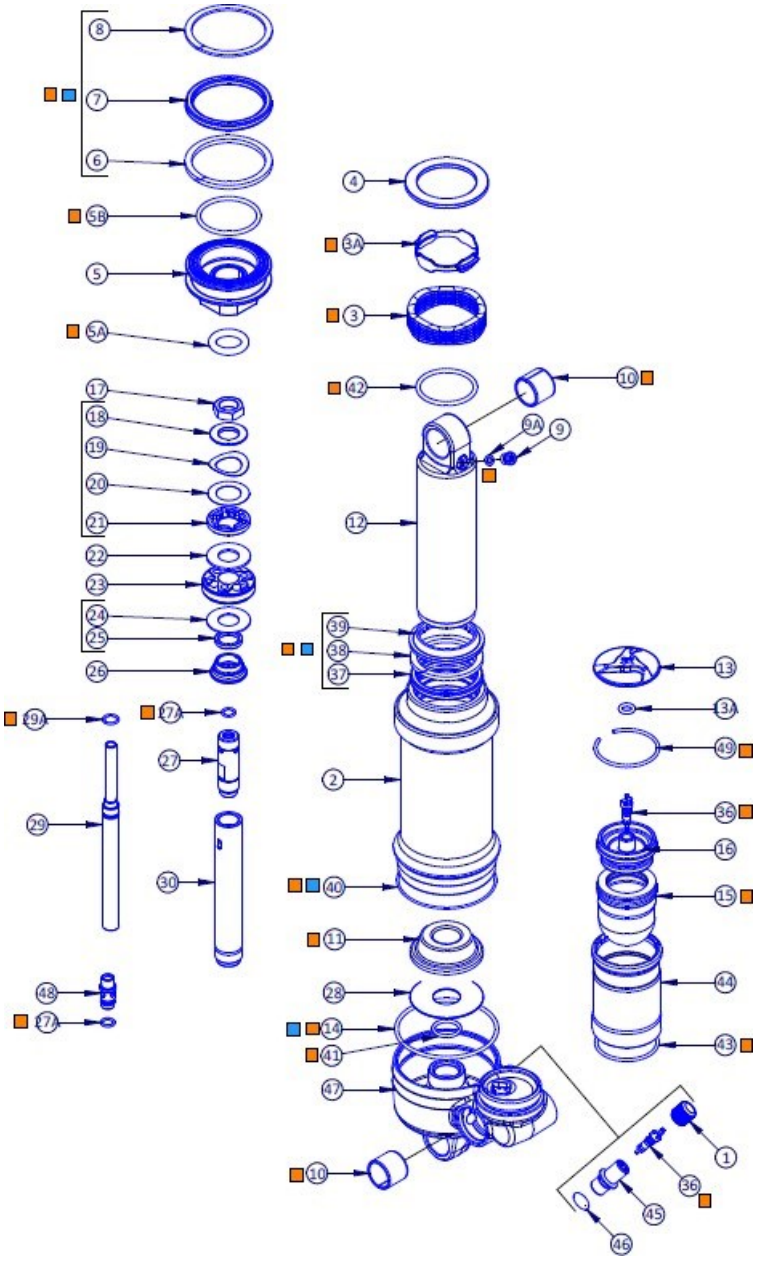

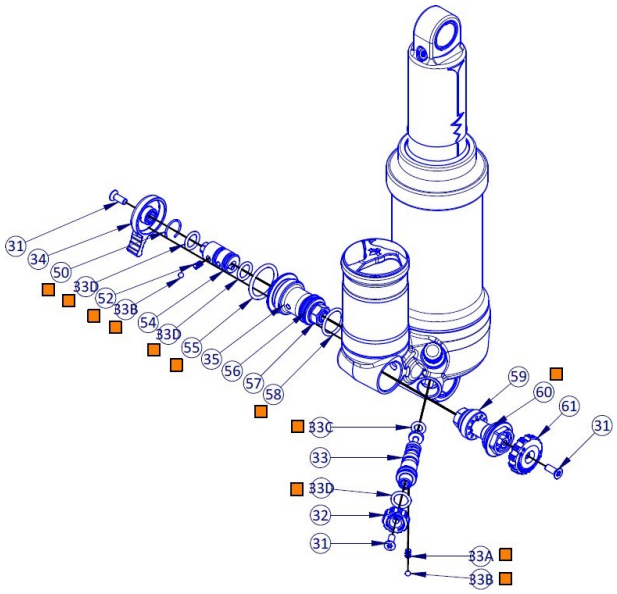

Required Tools

Description	Position	Q.ty	Part Number
BLADDER ASSEMBLY TOOL	100	1	AM-U003-05
STEM VISE TOOL	101	1	AM-U048-05
STEM ON SHOCK BODY TOOL	102	1	AM40053-00
STEM ON TRUNNION SHOCK BODY TOOL	103	1	AM40054-00
PIGGYBACK ASSEMBLY TOOL	104	1	AM-U039-05

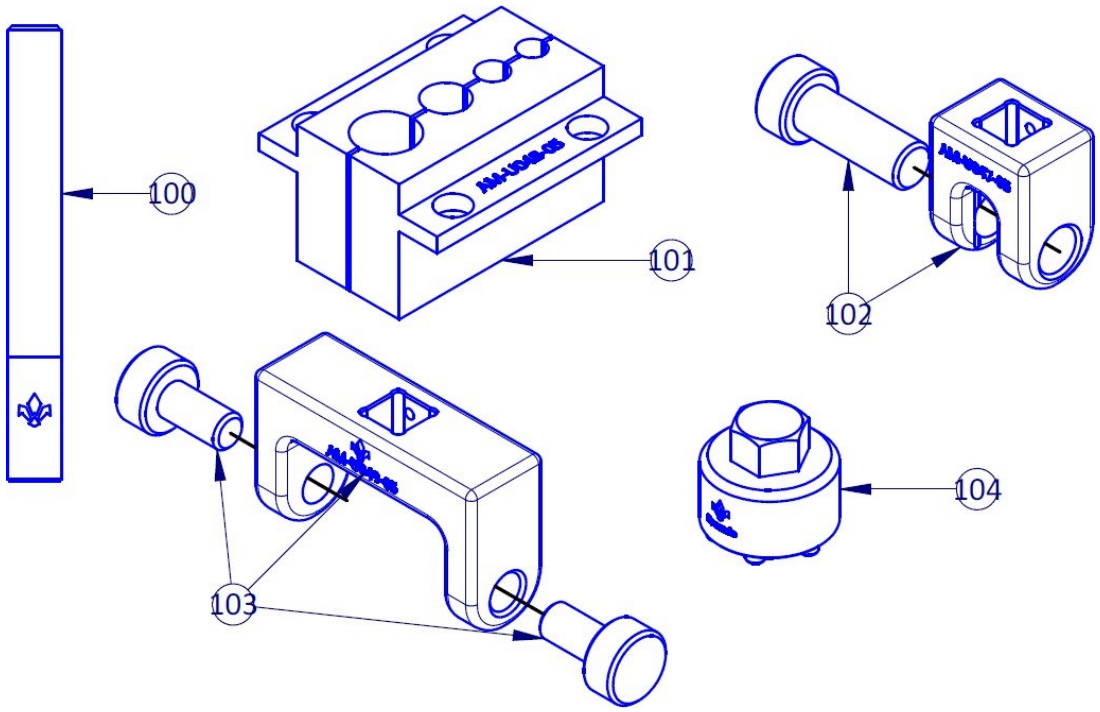

- Hex keys:
  - 9 mm, 13 mm
- Combined wrench:
  - 9 mm, 25 mm
- Torque wrench from 4 to 35 Nm
- Knipex ® pliers
- Valve stem removal tool with tightening torque of 0,5 Nm
- Formula grease
- Bench vise

Air Seal Replacement (60h)

Required items:

Part number	Description
AM40055-00	Kit 60h Nebbia

Required tools:

Bench vise, Formula grease.

Procedure:

1. Place the shock absorber in a bench vise with plastic jaws to prevent damage. Remove the sag indicator o-ring (42);
2. ⚠ Fully depressurize the air chamber using the valve (1). Ensure the pressure is zero. Disassembling a pressurized shock absorber can cause severe injuries. Before proceeding insert a rag in the eyelet of the shock absorber's cartridge;
3. Unscrew the air sleeve by hand (2) (grippy gloves will help) and carefully remove it from the shock absorber, then remove the spacer (4) and the negative wave spring with its guide (3);

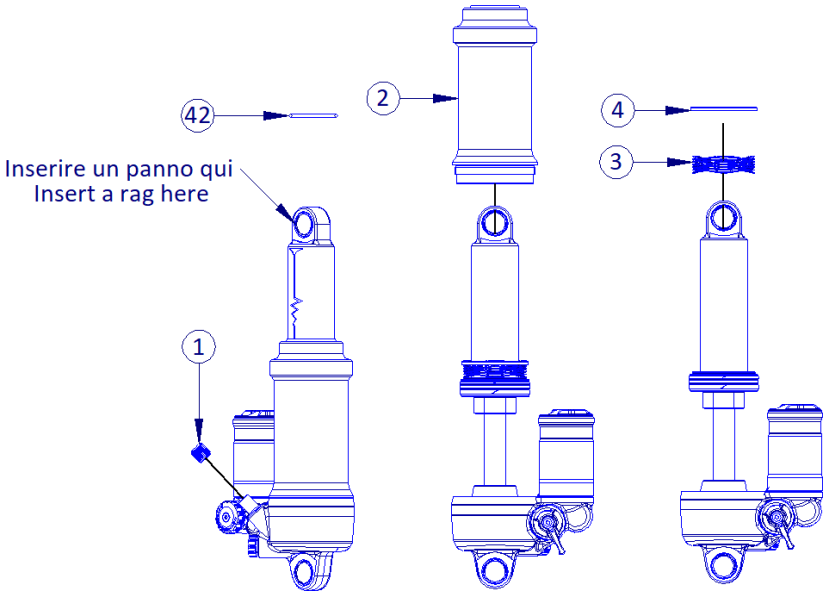

4. Remove the worn-out back-up rings and quad-ring (6, 7, 8) from the cartridge cap (5).
   Carefully clean the cartridge cap of any dirt or residue. Remove the o-ring (14) inside the shock absorber body and replace it with a new o-ring, fitting it into its housing;

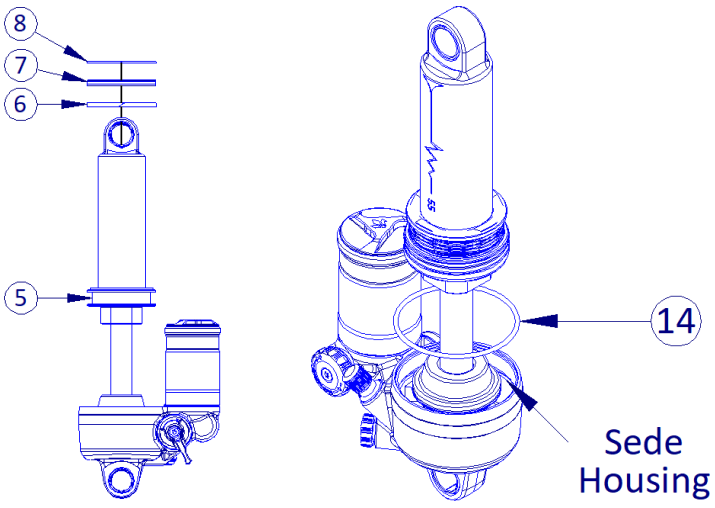

5. Remove the worn dust seal, backup ring, quad-ring, o-ring (39, 38, 37, 40) from the air sleeve (2). Carefully clean the shock absorber of any dirt or residue. Assemble the new components;
6. Insert the quad-ring (37) into its housing and apply Formula grease to the internal diameter of the quad-ring;
7. Insert the backup ring (38) by inserting the longer side of the 45° cut first. After assembly, ensure there are no deformations on the quad-ring (37). ⚠If incorrectly installed, this could cause pressure leaks in the pneumatic spring;
8. Insert the dust seal (39);
9. Insert the o-ring (40) into its housing and apply Formula grease to the outer diameter of the o-ring;

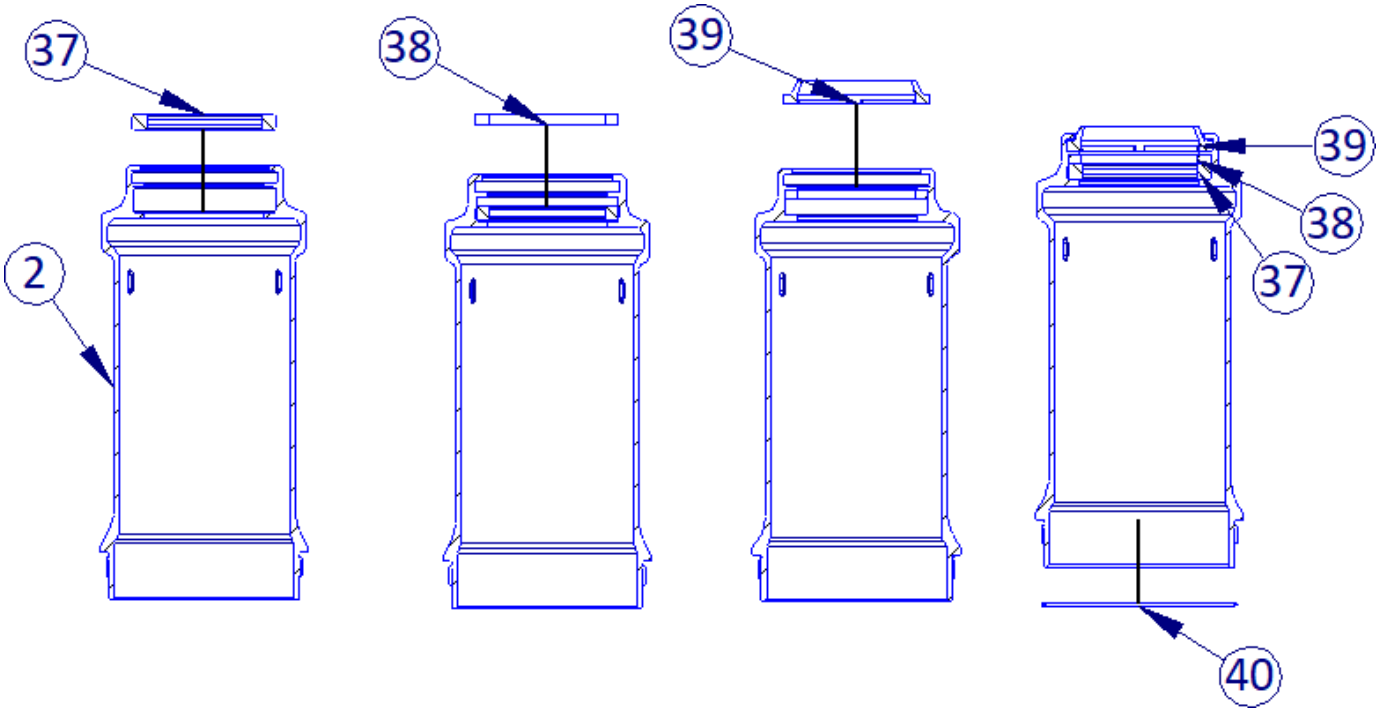

10. Rotate the lock-out lever (34) (PURPLE) to the LOCKOUT position and insert the cartridge cap (5):
    a. Thick back-up ring (2,3 mm) (6)
    b. Quad-ring (7)
    c. Thin back-up ring (1,2 mm) (8)
    d. Apply RSP Slick Kick grease on the three components

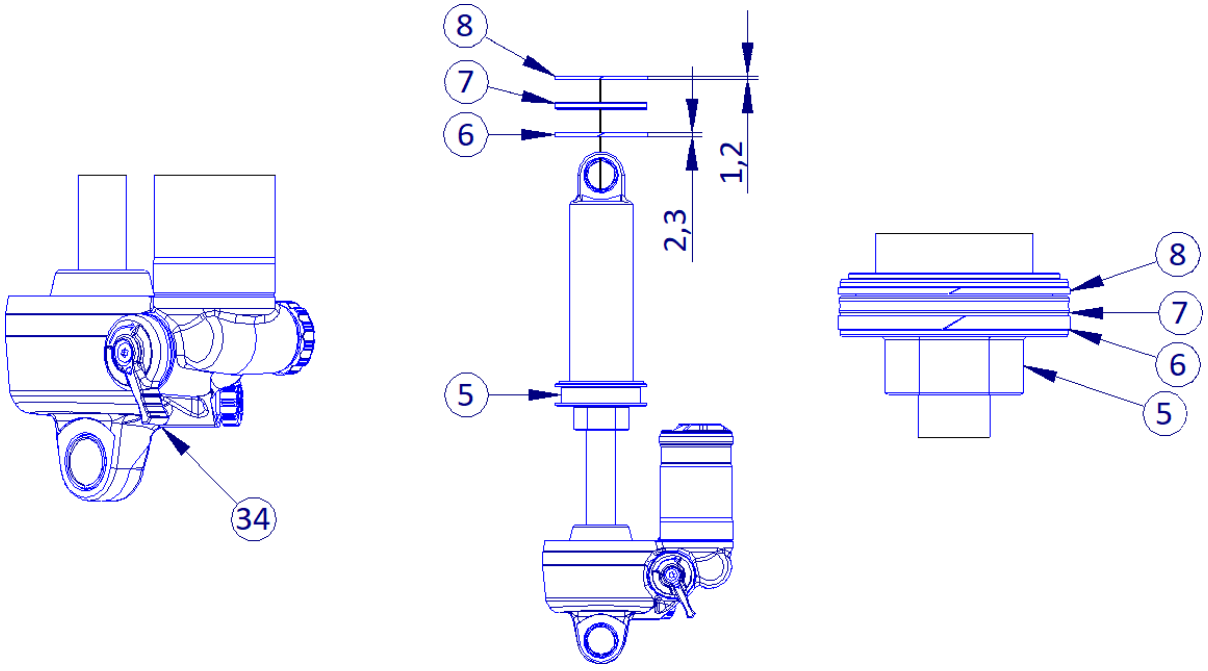

11. Slide the negative wave spring (3) onto the cartridge, then the spacer (4) pushing them against the cartridge cap (5). Apply grease to the air sleeve (2) where highlighted in red and insert it onto the shock absorber, tightening it by hand.

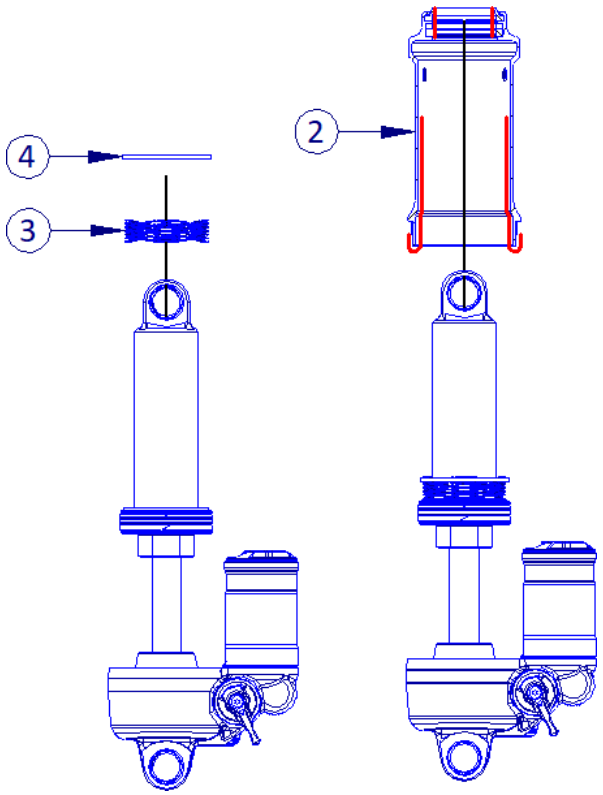

12. Pressurize the shock absorber to 150 psi and screw on the air valve cap (1). During the pressurization of the shock absorber, it will extend until it reaches the correct center distance. If this doesn't happen, disassemble the shock absorber and inspect the air seals.

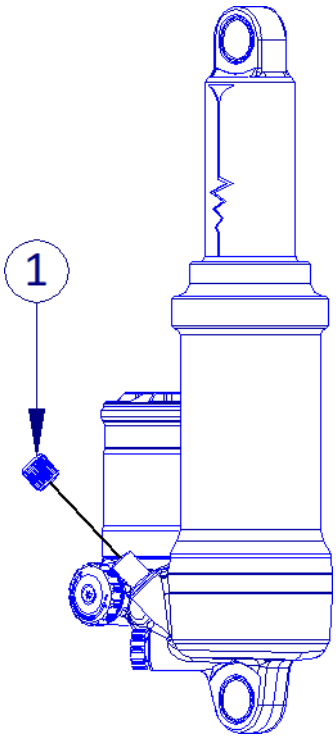

-End of Procedure-

Complete Maintenance (125h)

Required items:

Part number	Description
AM40057-00	Kit 125h Nebbia - Stroke 45-55 mm
AM40058-00	Kit 125h Nebbia - Stroke 65 mm
AM40059-00	Kit 125h Nebbia - Stroke 75 mm

Required tools:

Bench vise, Formula grease, Hex key 4mm, 25 mm, Combined wrench 9 mm, 30 mm, Torx T10, Socket wrench 5,5 mm.

Disassembly procedure

1. Place the shock absorber in a bench vise with plastic jaws to prevent damage. Remove the sag indicator o-ring (42);
2. ⚠ Fully depressurize the air chamber using the valve (1). Ensure the pressure is zero. Disassembling a pressurized shock absorber can cause severe injuries. Before proceeding insert a rag in the eyelet of the shock absorber's cartridge;
3. Unscrew the air sleeve by hand (2) (grippy gloves will help) and carefully remove it from the shock absorber, then remove the space

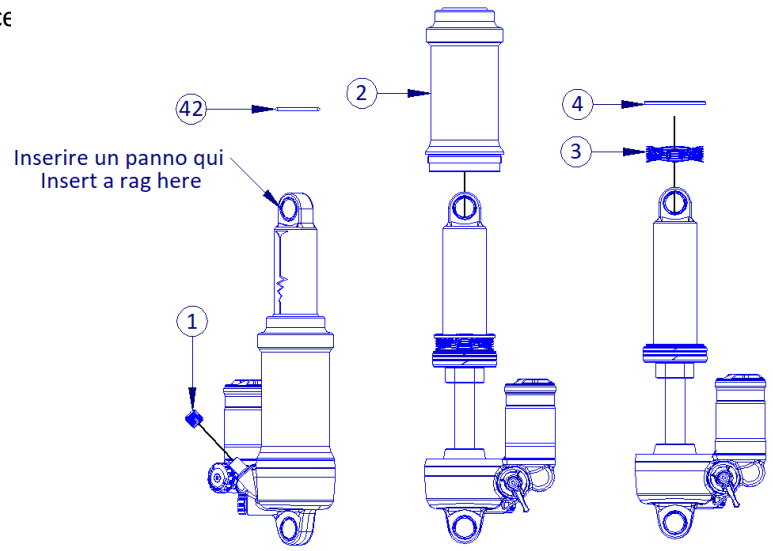

4. Remove the worn back-up rings and quad-ring (6, 7, 8) from the cartridge cap (5).
   Carefully clean the cartridge cap of any dirt or residue. Unscrew the bleed screw (9) with a Torx T10 and replace the o-ring (9A);

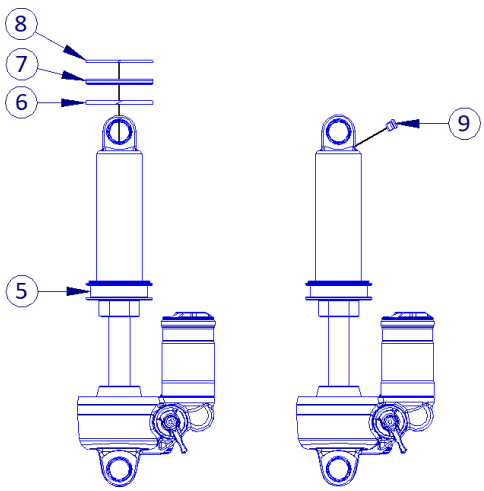

5. Place the cartridge eyelet in a bench vise with plastic jaws to prevent damage. Push the piston into the cartridge so that the cartridge cap (5) is touching the bumper (11) and keep it compressed. Unscrew the cartridge cap (5) from the cartridge (12) using Knipex® pliers and remove the shock absorber from the cartridge;

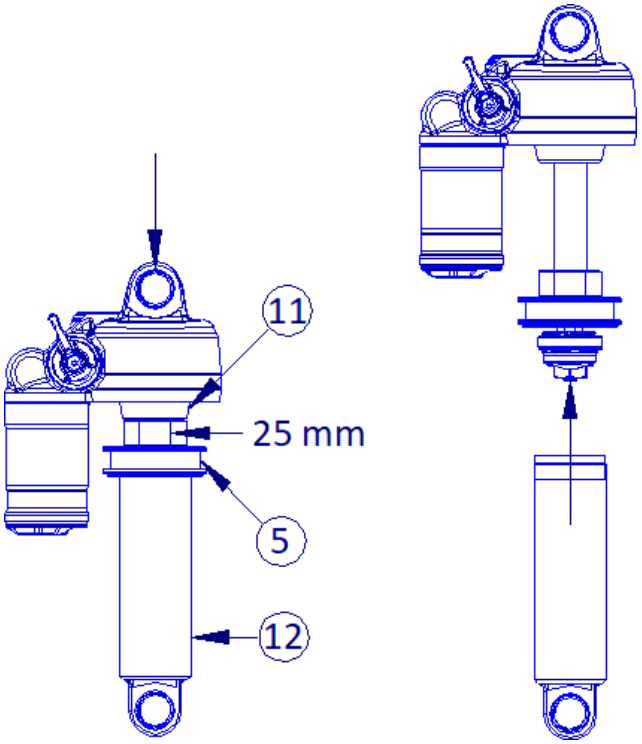

6. Place the shock absorber in a bench vise with plastic jaws to prevent damage. Manually unscrew the piggyback cap (13). Screw the bladder tool (100) onto the bladder cap (16) and push the bladder (15) downwards to remove the seeger ring (49). Then, remove the bladder (15) by pulling it upwards. Unscrew the tool (100);

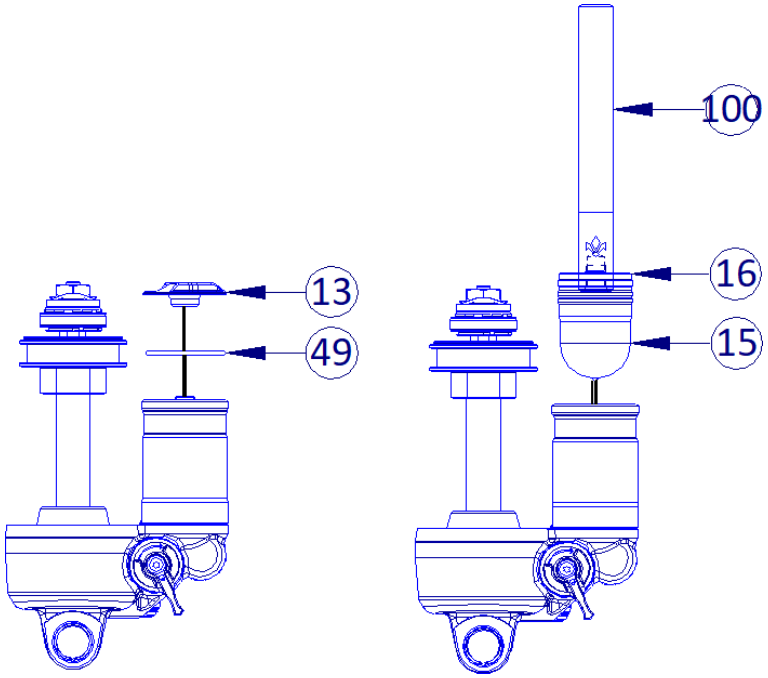

7. Unscrew the nut of hydraulic piston (17) with a 13 mm key and remove the components in order (from 18 to 26). Pay attention to the disassembly sequence and the orientation of the components. Unscrew the piston pin (27) using Knipex®, then remove the cartridge cap (5), the bumper (11) and the support for the bumper (28) from the stem. Remove the extension needle (29) from the stem;

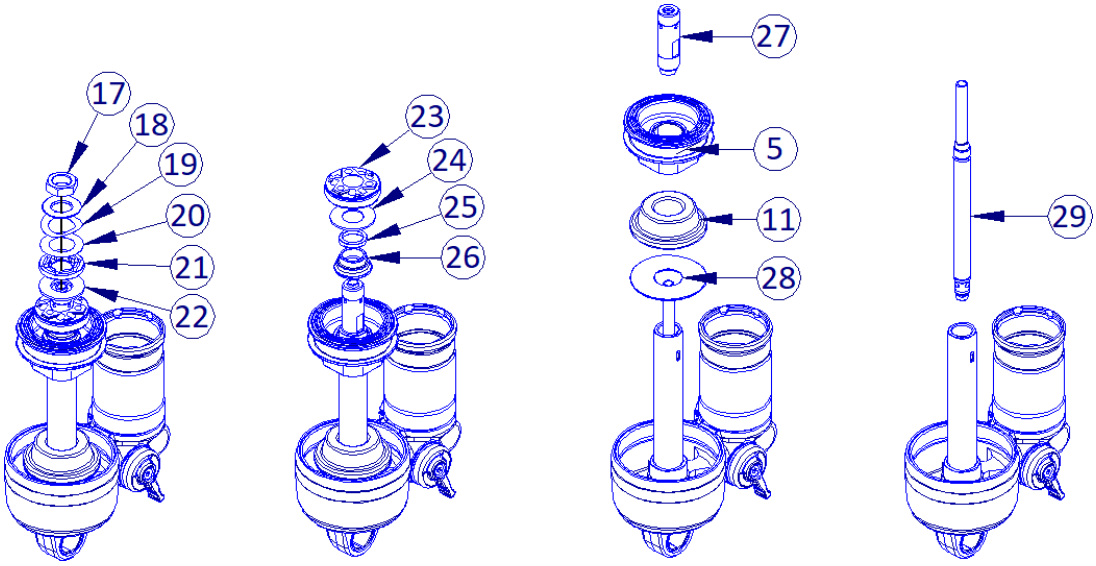

8. Unscrew the screws (31) for the rebound regulator (33), the lock-out (35) and CTS (59) with a Torx T10 and remove the levers (32, 34, 61). Unscrew the rebound regulator (33) (paying attention to the spring and ball inside) with a 4 mm hex key and the lock-out (35) from the shock body with a 13 mm socket wrench;

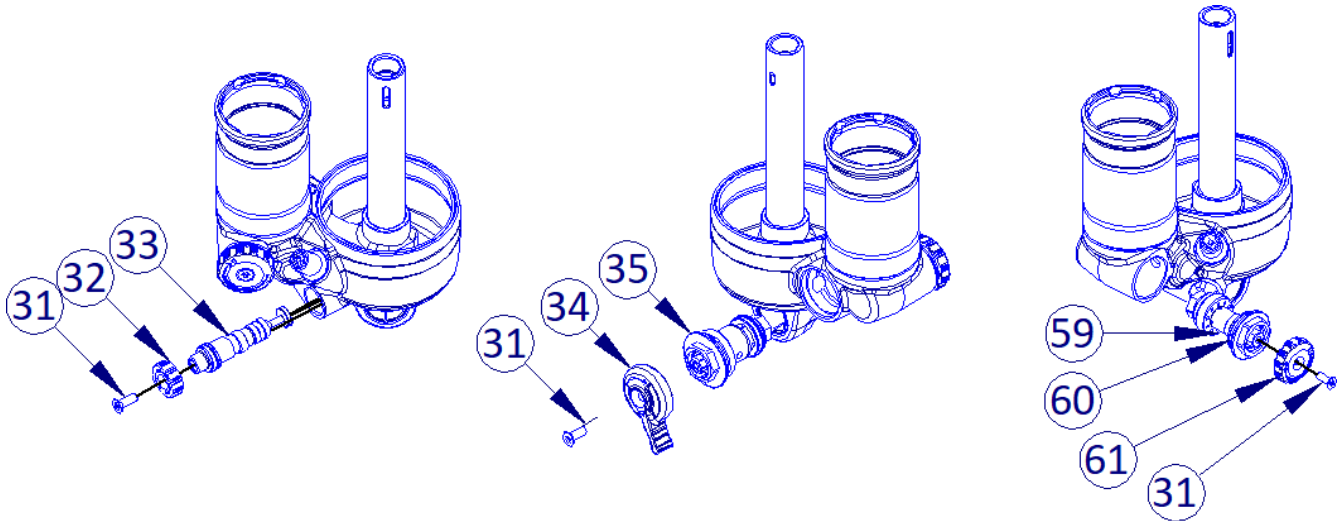

9. Tighten the stem (30) in a bench vise with tool AM-U048-05. Depending on the shock absorber you're servicing (standard or trunnion), use the required tool: AM-U047-05 and AM-U051-05 (102 – AM40053-00) for standard shocks, AMU049-05 and AM-U050-05 (103 – AM40054-00) for trunnion shocks. Pre-heat the stem (30) to loosen the glue and unscrew it from the body shock;

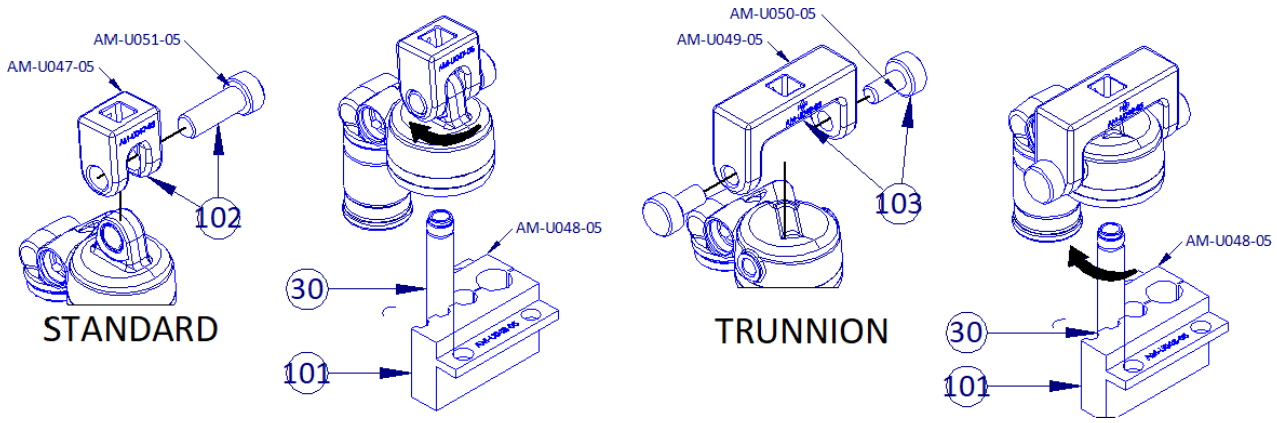

10. Clean any oil residue inside the shock absorber body, especially inside the rebound regulator area. Use compressed air to do the job. ⚠ This step is important to correctly bleed the shock absorber and ensure its proper functioning;
11. Unscrew the piggyback (44) with the correct tool (104) and replace the o-ring (43). Apply Formula grease on the new o-ring (43) and insert it into its housing. Apply Loctite 420 on the thread of the shock bleed and tighten the piggyback (44) to 10 Nm of torque;

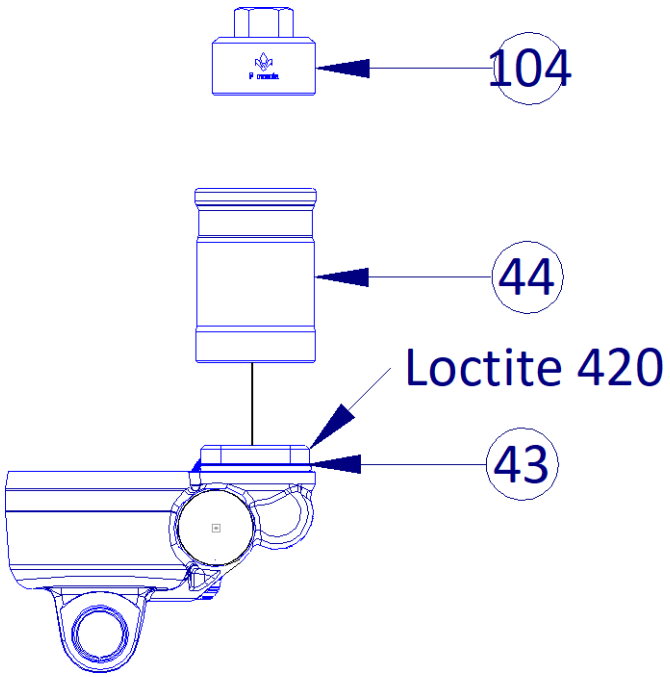

– Start assembling the shock absorber by replacing all components included in the 125h kit –

Replacement of shock body o-rings (14, 41) and stem (30) assembly

12. Carefully clean the shock body and ensure there is no damage. Remove worn o-rings (14, 41) and replace them with new ones;

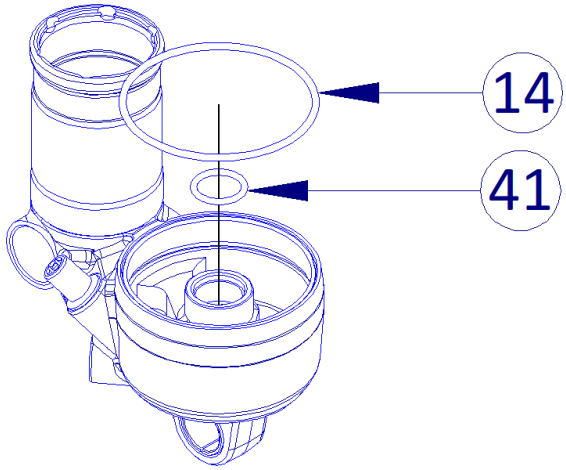

13. Tighten the stem (30) in a bench vise with tool AM-U048-05. Depending on the shock absorber you're servicing (standard or trunnion), use the required tool: AM-U047-05 and AM-U051-05 (102 – AM40053-00) for standard shocks or AMU049-05 and AM-U050-05 (103 – AM40054-00) for trunnion shocks. Screw the stem (30) on the body shock, tighten to 18 Nm of torque;

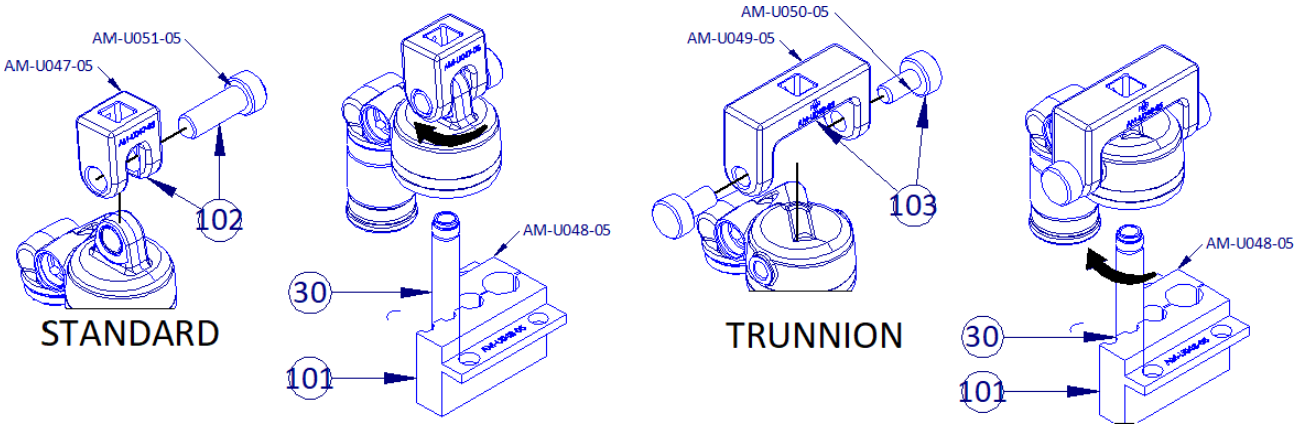

Extension needle o-ring replacement (29)

14. Remove the worn-out o-rings (29A, 27A) from the extension needle (29) and insert new ones while applying Formula grease;

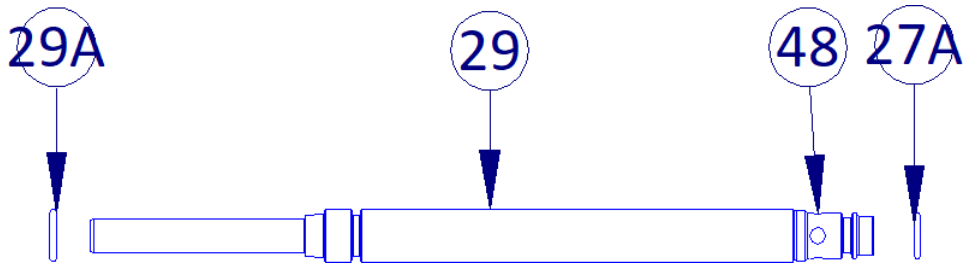

Rebound adjuster o-ring replacement (33)

15. Ensure the ball and the spring (33A, 33B) are still inside the rebound adjuster (33). Remove the worn o-rings (33C, 33D) and insert new ones;

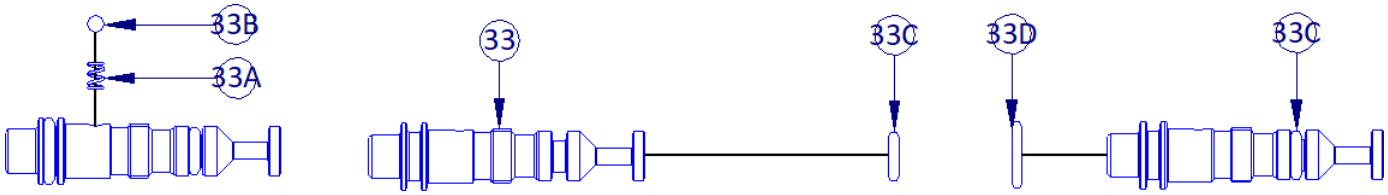

16. Screw the rebound adjuster (33) into the shock until it stops, without tightening it, using a 4 mm hex key. Then, unscrew the adjuster by 12 clicks. Insert the lever (32) on the rebound adjuster (33) and the screw (31) with a Torx T10;

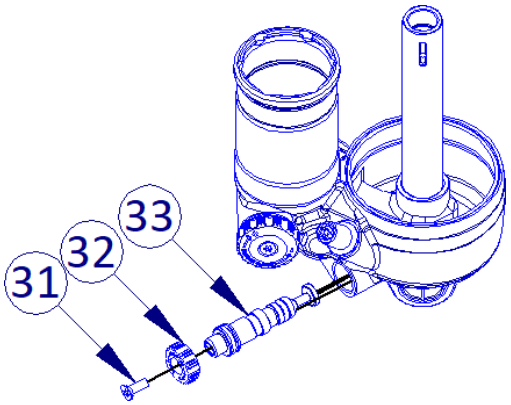

O-ring lock-out replacement (35)

17. Replace the external o-rings (55, 58). Remove the seeger ring (50) and extract the lockout adjuster (54). Ensure the ball and the spring (52, 33B) are still inside the adjuster. Replace the o-rings (33D);

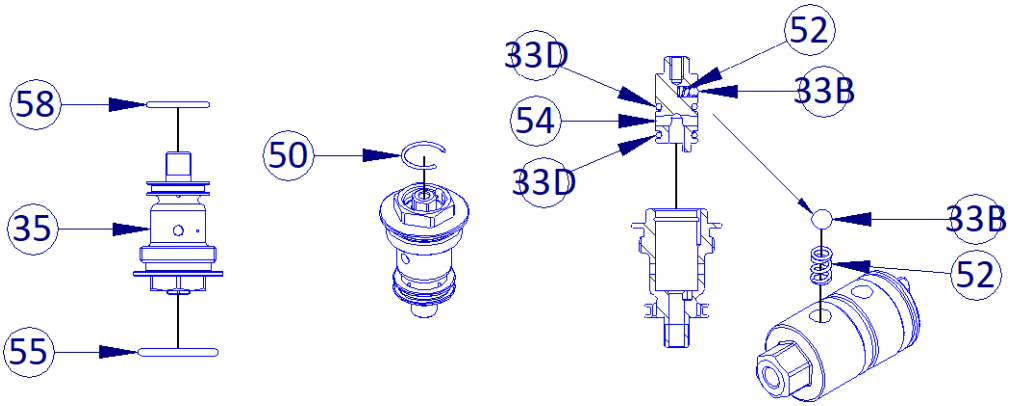

18. Insert the adjuster (54) inside the lock-out (35) and ensure it's correctly assembled in its housing. Insert the seeger ring (50);

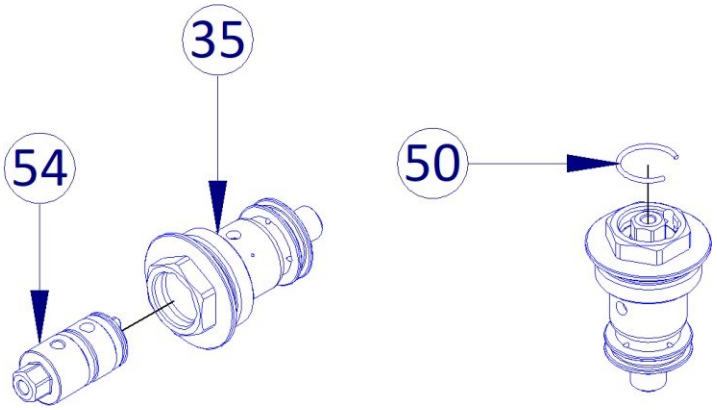

19. Insert the lock-out pin (35) into the shock body (47). Tighten to 7 Nm torque with a 13 mm socket wrench. Attach the lock-out lever (34), insert the screw (31) and tighten using a Torx T10;

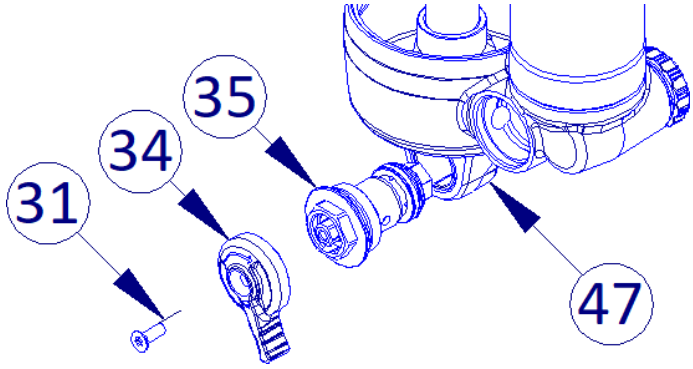

CTS o-rings replacement (59, 60)

20. Replace the outer o-ring (60) of the CTS (59). Screw the CTS with a 13 mm socket wrench and 7 Nm tightening torque. Attach the CTS dial (61), insert the screw (31) and tightenusing a Torx T10;

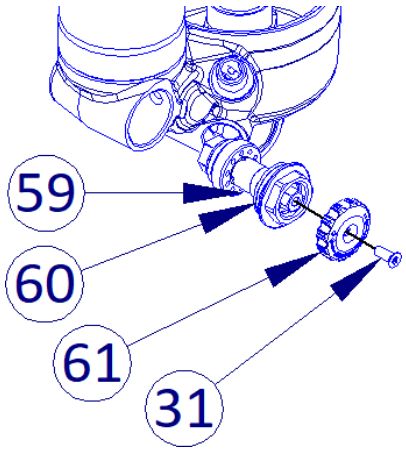

Cartridge cap o-rings replacement (5)

21. Carefully clean the cartridge cap (5) and ensure there is no damage. Remove the worn o-rings (5A, 5B) and replace with new ones. Apply Formula grease on the o-ring (5A). The bushing cannot be removed from the cap (5), if the bushing is worn replace the cartridge cap;

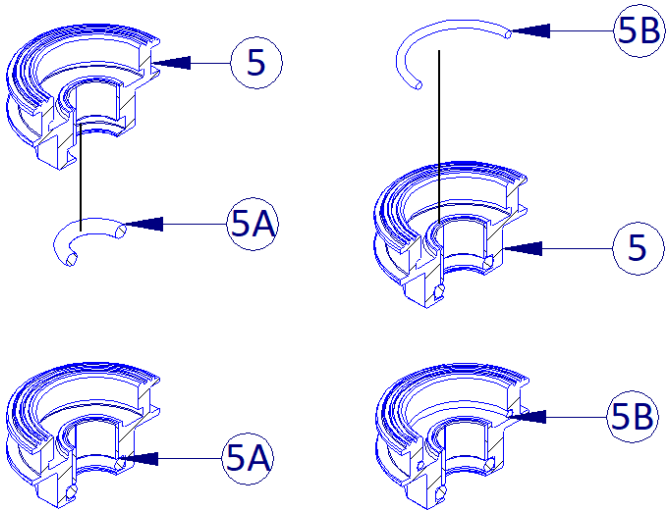

Stem components assembly

22. Carefully clean the stem (30) and ensure there is no damage. Insert the bumper support (28) and insert a new bumper (11). Insert the cartridge cap (5) onto the stem (30). Carefully insert the extension needle (29) inside the stem (30);

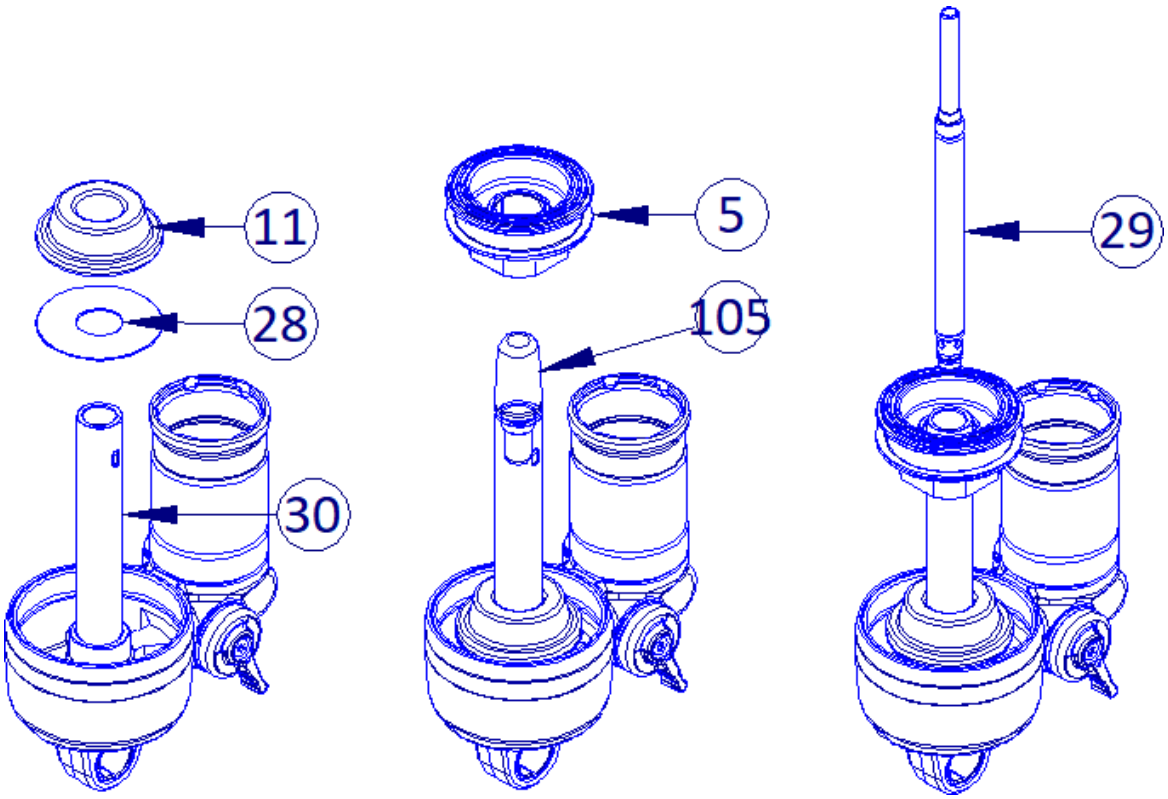

23. Replace the o-ring (27A). Apply Loctite 420 on the thread of the piston pin (27) and manually screw it onto the stem (30). Complete the assembly procedure by tightening with a 9 mm hex key to 8 Nm of torque;

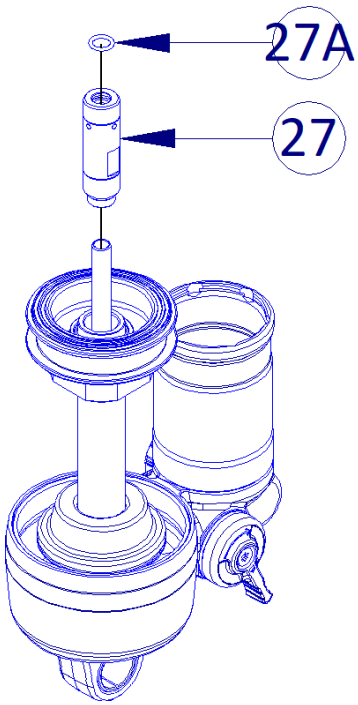

24. Insert in order, the piston spacer (26), the compression setting spacer (25), compression setting (24), piston (23) with the area highlighted in red facing upwards, and finally, the rebound shim stack (22). Insert in order the spacer (21), shim (20) and the spring (19) as shown in the picture. Insert the washer (18) and tighten the nut (17) with a 13 mm hex key to 7 Nm of torque;

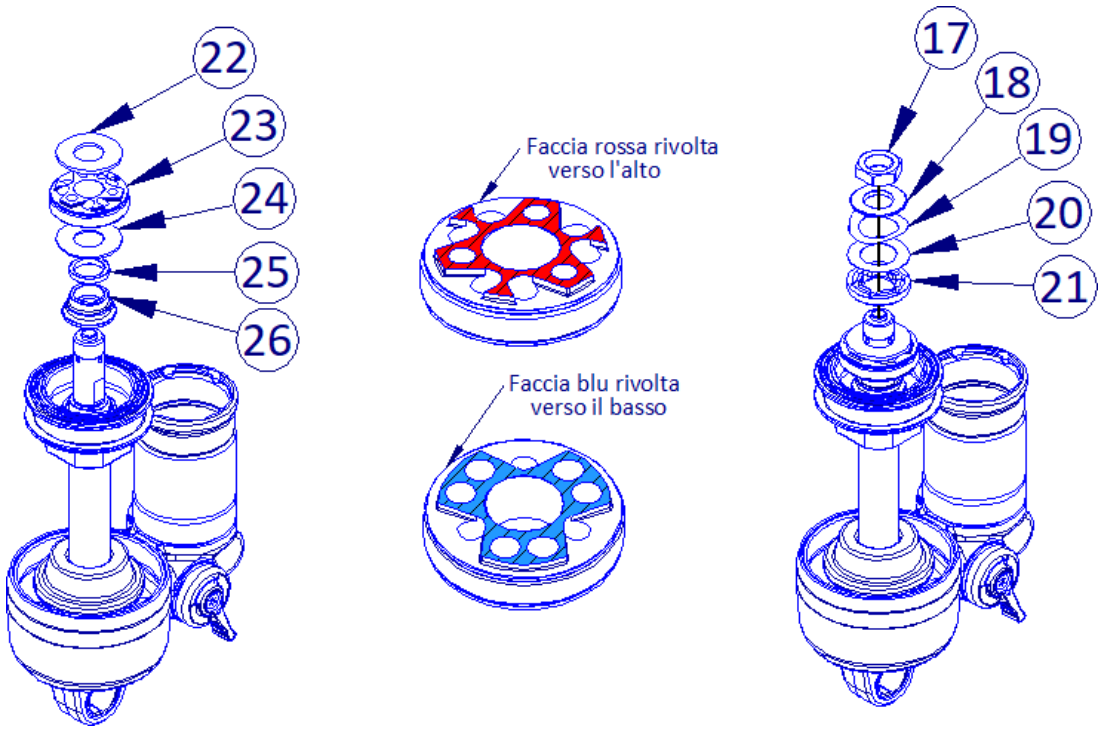

25. Disassemble the bladder cap (16) from the bladder (15). With a valve stem removal tool unscrew the valve (36) and replace it with a new one, tightening to 0,4/0,6 Nm of torque. ⚠ Ensure the valve is assembled as shown below. Replace the bladder (15) with a new one and apply Formula grease on all outer surfaces (highlighted in red) and all inner surfaces (highlighted in blue). Insert the bladder cap (16) inside the bladder (15);

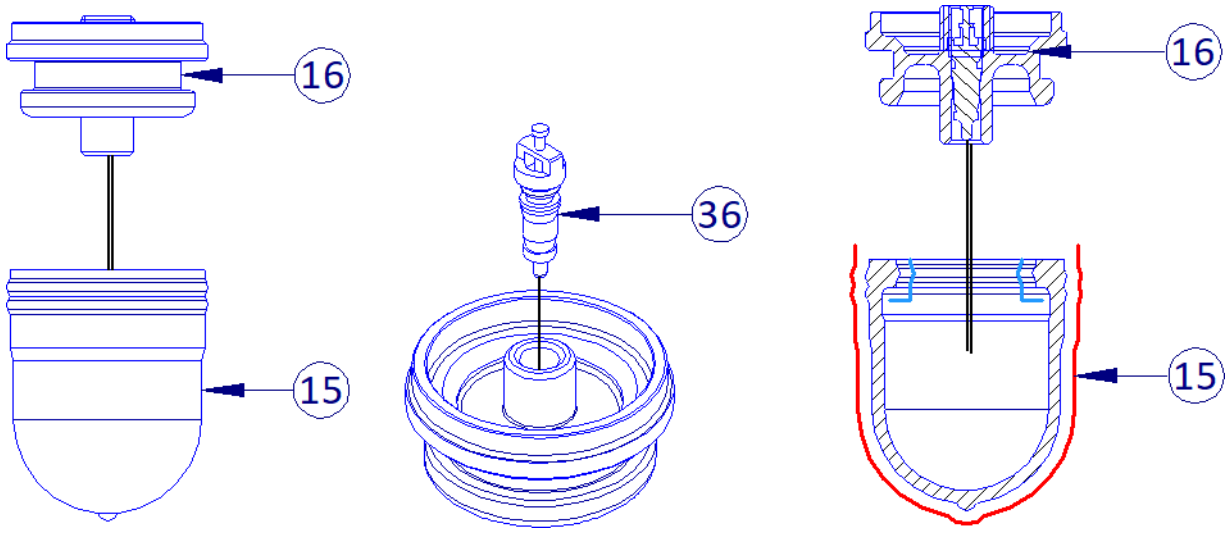

26. Screw the tool (100) onto the bladder cap (16) and insert the bladder (15) inside the external reservoir by pushing it downwards with the tool. Then insert the seeger ring (49) and pull the bladder upwards so that it touches the seeger ring. Unscrew the tool (100) and manually screw the piggyback cap (13);

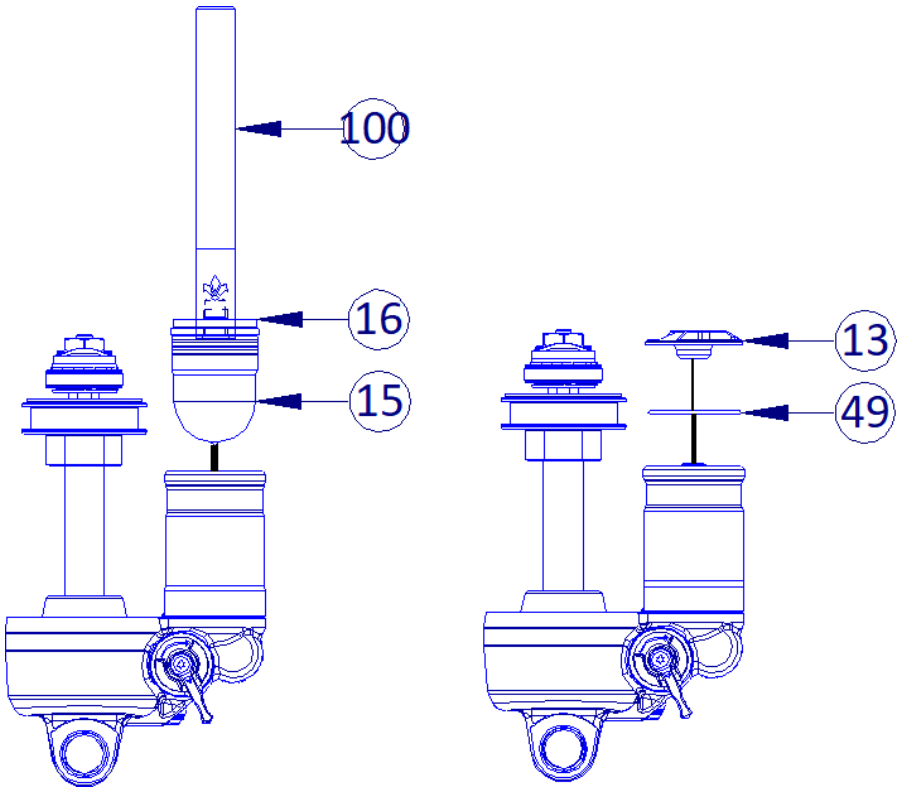

Air sleeve seals replacement (2)

Follow steps n°5 to n°12 of the "Air Seals Replacement (60h)" procedure.

https://www.rideformula.com/

FORMULA S.R.L.
Via Erbosa, 63 – 59100 Prato (Italia)
Tel. +39 0574 603 609
Fax +39 0574 611 046
Reg. Imprese Prato / C.F. / P.IVA 02081070977
PEC: formula-italy@legalmail.it
Cap. Soc. 500.000,00 € i.v.

The content of this document can be altered without notice. All rights reserved.
Revision 0 – 9 May 2024