# Product datasheet

Specifications



## Circuit breaker, GoPact MCCB 125, 4 poles, 30kA at 415VAC, 63A rating, TMD trip unit, fixed thermal protection

G12F4F63

## Main

| | |
|---|---|
| **Range of product** | GoPact MCCB |
| **Product or component type** | Circuit breaker |
| **Product name** | GoPact MCCB 125 |
| **Device application** | Distribution |
| **Poles description** | 4P |
| **Protected poles description** | 4D |
| **Neutral position** | Left |
| **[In] rated current** | 63 A at 40 °C |
| **[Ue] rated operational voltage** | 415 V AC 50/60 Hz conforming to EN/IEC 60947-2 |
| **Suitability for isolation** | Yes conforming to EN/IEC 60947-2 |
| **Utilisation category** | Category A |
| **[Icu] rated ultimate short-circuit breaking capacity** | 30 kA Icu at 380/415 V AC 50/60 Hz conforming to EN/IEC 60947-2<br>50 kA Icu at 220/230 V AC 50/60 Hz conforming to EN/IEC 60947-2 |
| **Performance level** | F 30 kA 380/415 V AC |
| **Trip unit name** | TM-D |
| **Trip unit technology** | Thermal-magnetic |
| **Trip unit protection functions** | LI |
| **control type** | Toggle |
| **Circuit breaker mounting mode** | Fixed |

## Complementary

| | |
|---|---|
| **[Ui] rated insulation voltage** | 440 V AC conforming to EN/IEC 60947-2 |
| **[Uimp] rated impulse withstand voltage** | 6 kV conforming to EN/IEC 60947-2 |
| **[Ics] rated service short-circuit breaking capacity** | 15 kA at 380/415 V AC 50/60 Hz conforming to EN/IEC 60947-2<br>25 kA at 220/230 V AC 50/60 Hz conforming to EN/IEC 60947-2 |
| **Mechanical durability** | 30000 cycles |
| **Electrical durability** | 8000 cycles at 415 V In |
| **Power dissipation per pole** | 18.7 W |
| **Mounting support** | Backplate |
| **Mounting position** | Horizontal and vertical<br>Flat on the back |
| **Upside connection** | Front |
| **Downside connection** | Front |

Disclaimer: This documentation is not intended as a substitute for and is not to be used for determining suitability or reliability of these products for specific user applications

| | |
|---|---|
| **Connection terminals** | screw terminals |
| **Connection pitch** | 25 mm |
| **Protection type** | L : for overload protection (thermal)<br>I : for short-circuit protection (magnetic) |
| **Trip unit rating** | 63 A at 40 °C |
| **Long-time pick-up adjustment type Ir (thermal protection)** | Fixed |
| **[Ir] long-time protection pick-up adjustment range** | 1 x In |
| **Long-time protection delay adjustment type tr** | Fixed |
| **Instantaneous protection pick-up adjustment type Ii** | Fixed |
| **[Ii] instantaneous protection pick-up adjustment range** | 10 x In |
| **Neutral protection settings** | 1 x Ir (4D) |
| **Width (W)** | 100 mm |
| **Height (H)** | 130 mm |
| **Depth (D)** | 60 mm |
| **Net weight** | 0.9 kg |
| **Colour** | Grey (RAL 7035) |

## Environment

| | |
|---|---|
| **Standards** | EN/IEC 60947-1<br>EN/IEC 60947-2<br>EN/IEC 60947-2 Annex H |
| **Overvoltage category** | III |
| **Pollution degree** | 3 conforming to IEC 60664-1 |
| **IP degree of protection** | IP20 conforming to IEC 60529 |
| **Ambient air temperature for operation** | -20…55 °C |
| **Ambient air temperature for storage** | -35…85 °C |
| **Operating altitude** | 0...2000 m without derating<br>2000...5000 m with derating |

## Packing Units

| | |
|---|---|
| **Unit Type of Package 1** | PCE |
| **Number of Units in Package 1** | 1 |
| **Package 1 Height** | 12.4 cm |
| **Package 1 Width** | 11 cm |
| **Package 1 Length** | 13.9 cm |
| **Package 1 Weight** | 1187 g |
| **Unit Type of Package 2** | S02 |
| **Number of Units in Package 2** | 6 |
| **Package 2 Height** | 15 cm |
| **Package 2 Width** | 30 cm |
| **Package 2 Length** | 40 cm |
| **Package 2 Weight** | 7.437 kg |

| | |
|---|---|
| **Unit Type of Package 3** | P06 |
| **Number of Units in Package 3** | 96 |
| **Package 3 Height** | 75 cm |
| **Package 3 Width** | 60 cm |
| **Package 3 Length** | 80 cm |
| **Package 3 Weight** | 127.492 kg |

## Contractual warranty

| | |
|---|---|
| **Warranty (in months)** | 18 |

## Environmental Data

Schneider Electric aims to achieve Net Zero status by 2050 through supply chain partnerships, lower impact materials, and circularity via our ongoing “Use Better, Use Longer, Use Again” campaign to extend product lifetimes and recyclability.

Environmental Data explained >

How we assess product sustainability >

### Environmental footprint

| | |
|---|---|
| Total lifecycle Carbon footprint | 669 |
| Environmental Disclosure | Product Environmental Profile |

## Use Better

### Materials and Packaging

| | |
|---|---|
| Packaging made with recycled cardboard | Yes |
| Packaging without single use plastic | No, we have minimized the use of plastic in the packaging in compliance with regulations and considering quality and safety standards |
| EU RoHS Directive | Compliant with Exemptions |
| SCIP Number | 7ccb5ff0-1063-42f0-88cf-9573d7504038 |
| REACh Regulation | REACh Declaration |
| Halogen-free status | Halogen free plastic parts product |
| PVC free | Yes |
| Silicone-free | Yes |

## Use Longer

### Lifetime extension

| | |
|---|---|
| Repair | No |

## Use Again

### Repack and remanufacture

| | |
|---|---|
| End of life manual availability | End of Life Information |
| Take-back | No |

Technical Illustration

## Dimensions

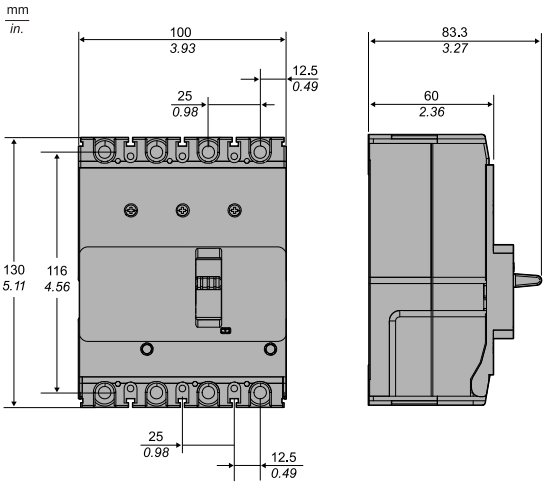

Offer Marketing Illustration

**Product benefits / Features**



Offer Marketing Illustration

**Product benefits / Features**

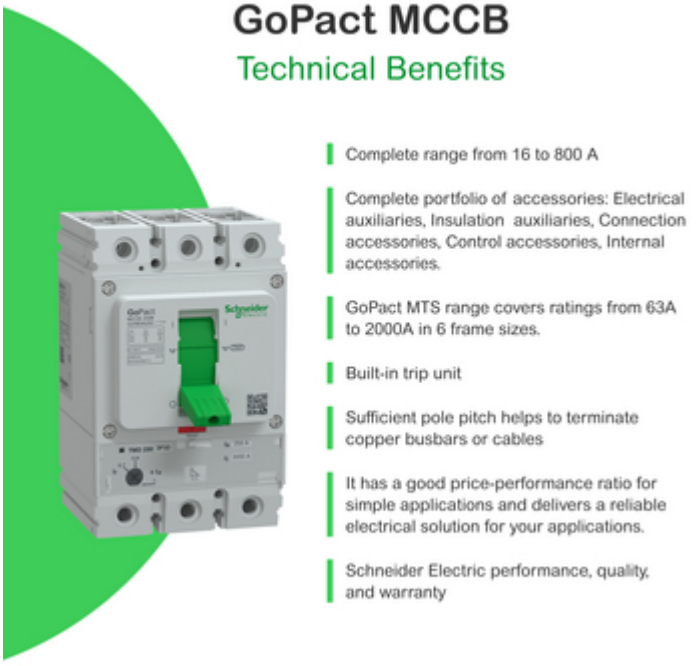

Offer Marketing Illustration

**Product benefits / Features**

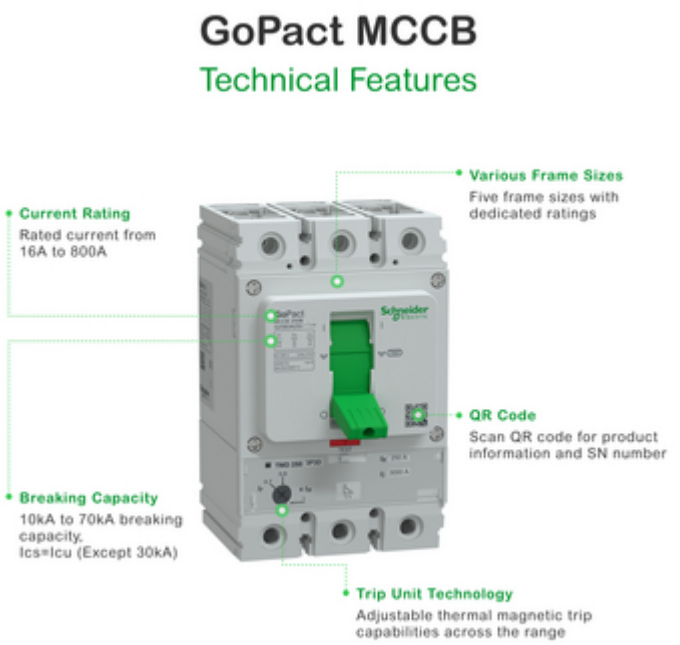

Offer Marketing Illustration

**Product benefits / Features**

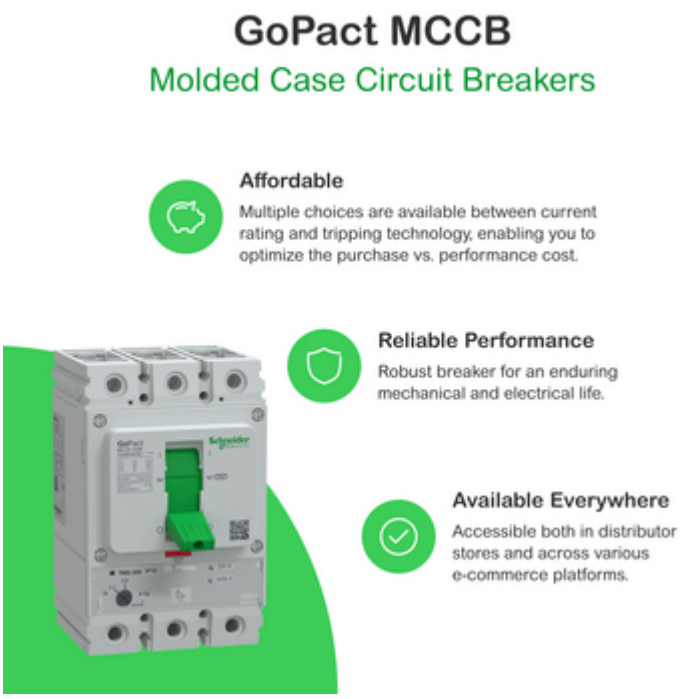

Offer Marketing Illustration

**Product benefits / Features**

