General InformationBody Repairs, General Body Repairs

Edition 04.2018

Protected by copyright. Copying for private or commercial purposes, in part or in whole, is not permitted unless authorised by AUDI AG. AUDI AG does not guarantee or accept any liability with respect to the correctness of information in this document. Copyright by AUDI AG.

MUESTRA GRATUITA

WWW.MULTIMANUALES.CL

– If necessary, remove sanding residue at wiring lug using de-burrer.
– Screw wiring lug back on to specified torque ⇒ Current flow diagrams, Electrical fault finding and Fitting locations.

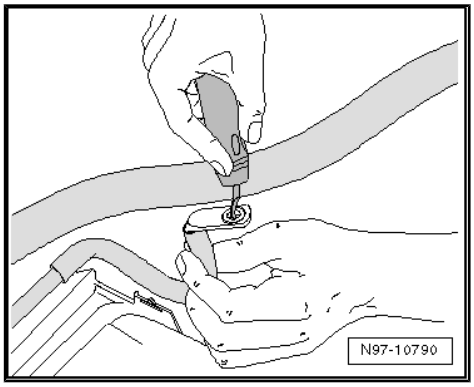

Note

To ensure optimum contact, tighten all screw connections to specified torque after cleaning.

– Protect connection from corrosion by applying corresponding anti-corrosion agent. ⇒ page 168
– Reconnect battery.

WARNING

Risk of injury. Observe warnings and safety regulations.
⇒ page 3

Protected by copyright. Copying for private or commercial purposes, in part or in whole, is not permitted unless authorised by AUDI AG. AUDI AG does not guarantee or accept any liability with respect to the correctness of information in this document. Copyright by AUDI AG.

– Re-adapt electric windows, enter radio code, set clock and, if necessary, recode any control units with fault messages.

3.1.2 Servicing screw connections

Special tools and workshop equipment required

♦ VAG 1331

MUESTRA GRATUITA

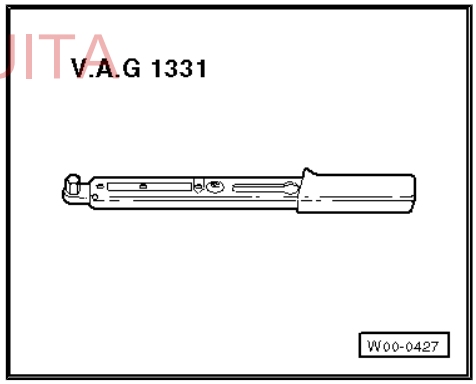

Note

♦ *To prevent the screw connection from cracking when the tightening torque has been exceeded due to a lack of friction in the thread, do not apply rust remover, contact spray or grease to the screw connection.*
♦ *The grey sanding pads can be used for slight impurities and "soft surfaces". The red sanding pads can be used for more severe impurities and "hard surfaces".*

WARNING

Risk of injury. Observe warnings and safety regulations.
⇒ page 3

– Disconnect battery.

WWW.MULTIMANUALES.CL

– To protect against escaping brake fluid, place a sufficient number of lint-free cloths in area beneath brake servo.
– Draw off as much brake fluid as possible from brake fluid reservoir using brake filling and bleeding equipment - VAS 5234- with adapter - VAS 5234/1A-.

Protected by copyright. Copying for private or commercial purposes, in part or in whole, is not permitted unless authorised by AUDI AG. AUDI AG does not guarantee or accept any liability with respect to the correctness of information in this document. Copyright by AUDI AG.



– Remove bolts -1, 2-.
– Have a second mechanic lift power and control electronics for electric drive - JX1- -item 3- slightly at front and pull power and control electronics out of grommets at rear -arrow-.
– Lift power and control electronics at rear until stud for brake fluid reservoir can be accessed.

MUESTRA GRATUITA

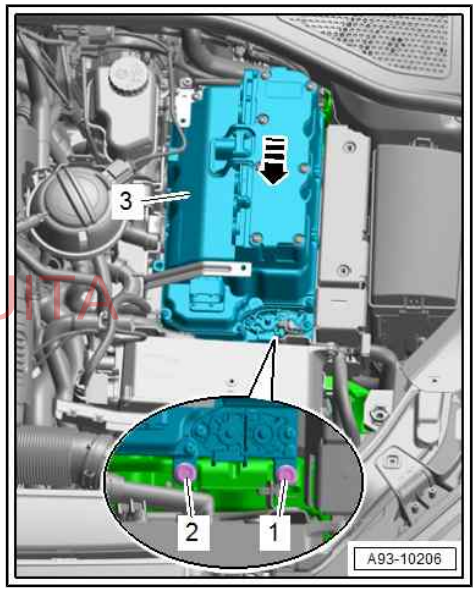

– Unscrew stud -arrow- and pull brake fluid reservoir -1- upwards out of sealing plugs.

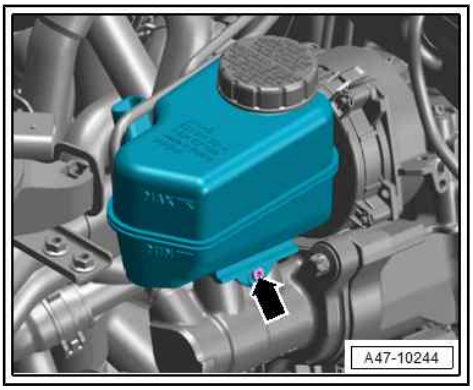

WWW.MULTIMANUALES.CL

NOTICE

Risk of engine damage due to excessive sealant in lubrication system.

– **The sealant bead must not be thicker than specified.**

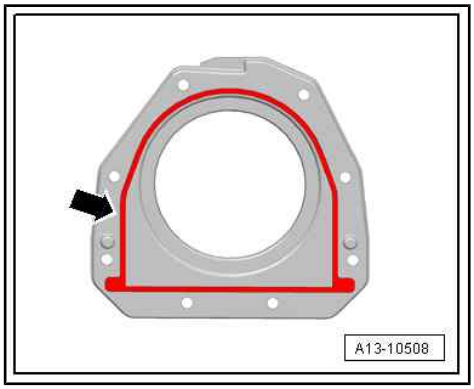

- Thickness of sealant bead: 2 ... 3 mm
- The sealing flange must be installed within 5 minutes after applying sealant.
- Check that sealing lip of sealing flange is not bent or damaged.
- Sealing lip must face engine after installation -arrow-. If the sealing lip faces outwards after installation this will result in oil leakage.

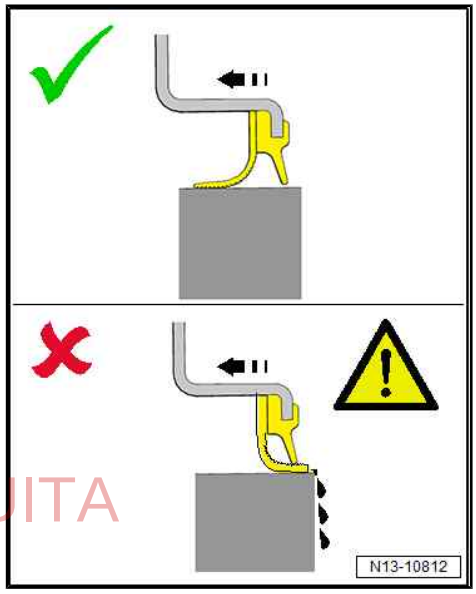

MUESTRA GRATUITA

– Check guide piece - T10122/6A- -B-; it must not have sharp edges or be dirty.
– Fit assembly aid - T10122/1- -A- onto guide piece -B-.
– Push sealing flange -C- onto guide piece -B-, starting with outer edge.
– Detach assembly aid -A-.

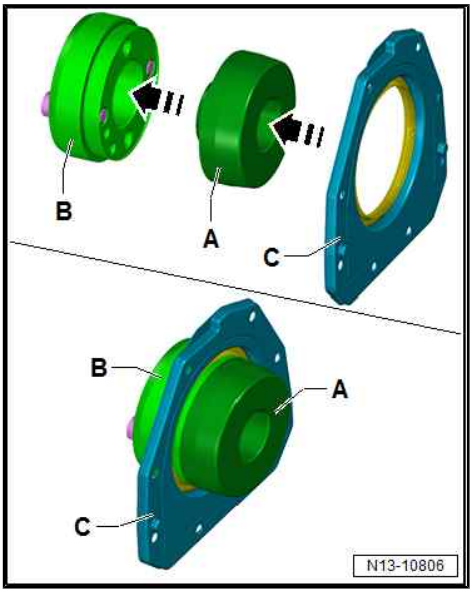

Protected by copyright. Copying for private or commercial purposes, in part or in whole, is not permitted unless authorised by AUDI AG. AUDI AG does not guarantee or accept any liability with respect to the correctness of information in this document. Copyright by AUDI AG.

WWW.MULTIMANUALES.CL

2 Wing

⇒ “2.1 Exploded view - wing”, page 16
⇒ “2.2 Exploded view - repair set for wing”, page 17
⇒ “2.3 Removing and installing wing”, page 17
⇒ “2.4 Removing and installing wing panel brace”, page 20
⇒ “2.5 Removing and installing closure plate”, page 21

2.1 Exploded view - wing

Protected by copyright. Copying for private or commercial purposes, in part or in whole, is not permitted unless authorised by AUDI AG. AUDI AG does not guarantee or accept any liability with respect to the correctness of information in this document. Copyright by AUDI AG.

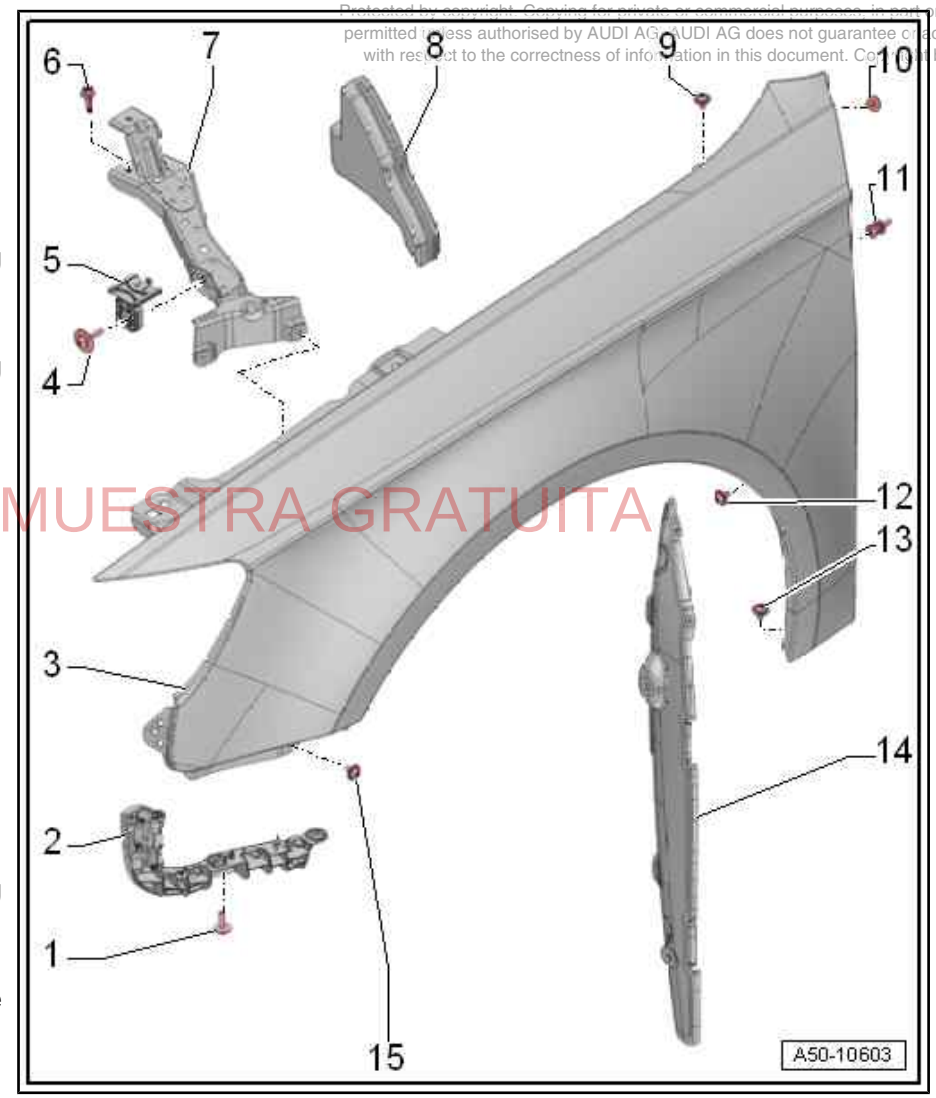

1 - Bolt
- ❑ 2x
- ❑ 4.5 Nm

2 - Mounting
- ❑ For bumper cover
- ❑ For securing headlight
- ❑ Removing and installing ⇒ page 207

3 - Wing
- ❑ Removing and installing ⇒ page 17
- ❑ Repair set ⇒ page 17

4 - Bolt
- ❑ Tightening torque ⇒ Electrical system; Rep. gr. 94 ; Headlights

5 - Mounting
- ❑ For headlight

6 - Bolt
- ❑ 2x
- ❑ 8 Nm

7 - Bracket (bottom)
- ❑ For wing
- ❑ Removing and installing ⇒ page 20

8 - Sealing piece
- ❑ Self-adhesive; on inside of wing

9 - Bolt
- ❑ 3x
- ❑ 8 Nm

10 - Bolt
- ❑ 8 Nm

11 - Spreader rivet
- ❑ 2x

12 - Bolt
- ❑ 2x
- ❑ 8 Nm

MUESTRA GRATUITA

WWW.MULTIMANUALES.CL

5.5.2 Exploded view - C-pillar trim, A3 Sportback

1 - Intermediate cover

- ❑ Removing and installing ⇒ page 304
- ❑ Clip into C/D-pillar trim

2 - Clip

- ❑ 2x
- ❑ Insert in intermediate cover
- ❑ Remove any clips left in D-pillar trim and insert in cover for installation
- ❑ Renew clip if damaged or deformed

3 - Clip

- ❑ 2x
- ❑ Insert in trim
- ❑ Remove any clips left in body mounting points using removal tool - T40280- and insert in trim for installation
- ❑ Renew clips if damaged or deformed

4 - C-pillar trim

- ❑ Removing and installing ⇒ page 302
- ❑ Insert at top in mounting point at roof and clip into C-pillar
- ❑ Push on until it engages audibly
- ❑ Fold over lip of door seal

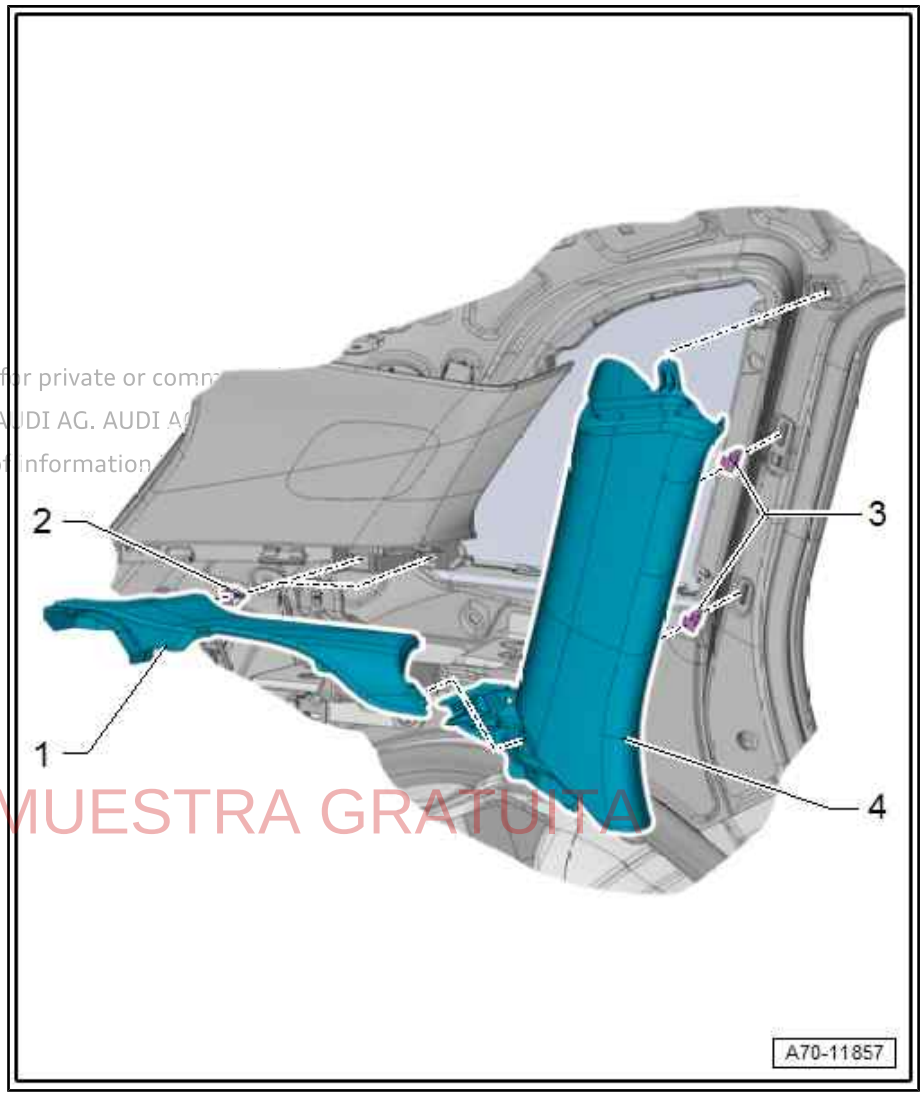

Protected by copyright. Copying for private or comm
permitted unless authorised by AUDI AG. AUDI A
with respect to the correctness of information
MUESTRA GRATUITA

WWW.MULTIMANUALES.CL

1 - Door

2 - Window regulator

- ❑ Removing and installing ⇒ page 148

3 - Nut

- ❑ 6 Nm

4 - Rear window regulator motor

Convenience system (low version)

- ❑ Control unit with rear driver side window regulator motor - J1016- , control unit with rear passenger side window regulator motor - J1017-
- ❑ Removing and installing ⇒ page 125

Convenience system (high version)

- ❑ Rear driver side window regulator motor - V471- , rear passenger side window regulator motor - V472-
- ❑ Removing and installing ⇒ page 149

5 - Bolt

- ❑ 3x
- ❑ 3.5 Nm

6 - Rear door control unit

- ❑ Equipment version
- ❑ Rear driver side door control unit - J926- , rear passenger side door control unit - J927-
- ❑ Overview of fitting locations ⇒ page 120

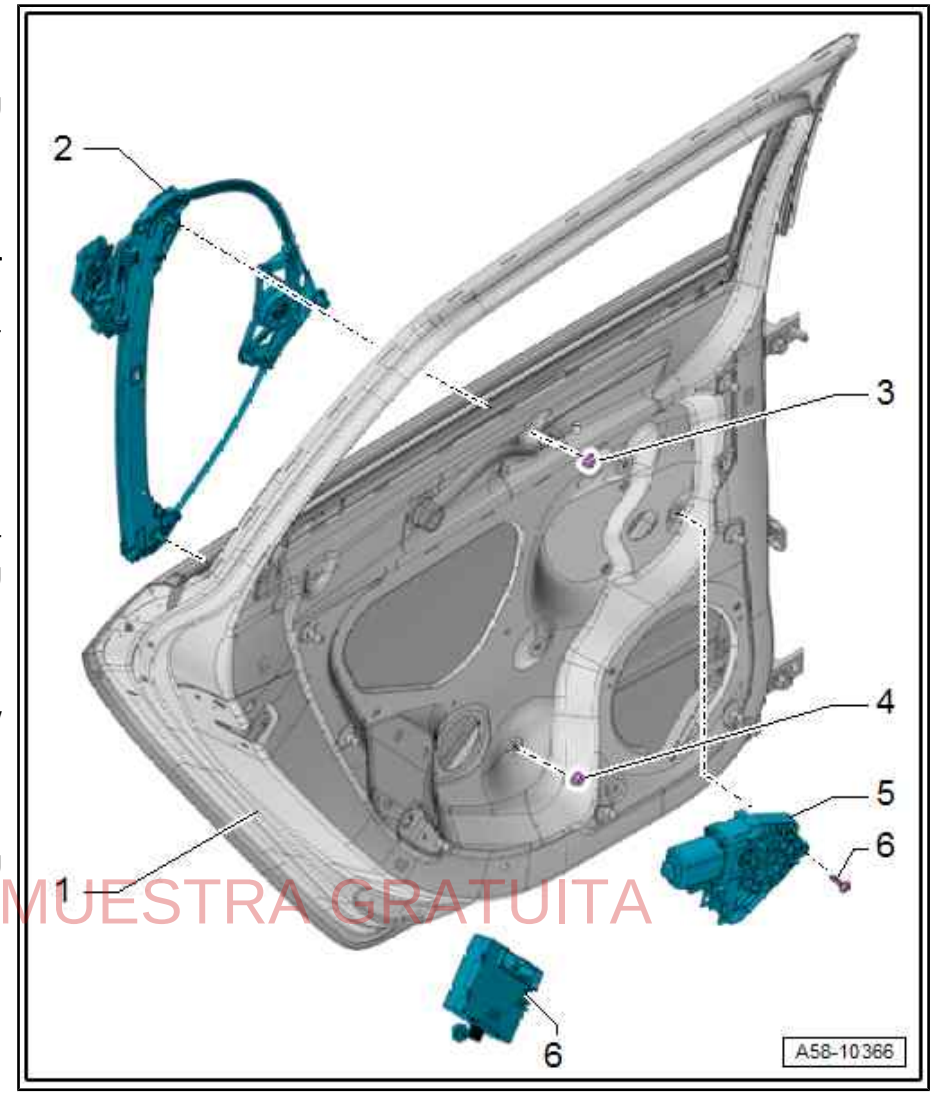

MUESTRA GRATUITA

2.2 Exploded view - door handle and door lock

Exploded view - door handle and mounting bracket ⇒ page 144

Exploded view - door lock and striker ⇒ page 145

Exploded view - door handle and mounting bracket

Protected by copyright. Copying for private or commercial purposes, in part or in whole, is not permitted unless authorised by AUDI AG. AUDI AG does not guarantee or accept any liability with respect to the correctness of information in this document. Copyright by AUDI AG.

WWW.MULTIMANUALES.CL

Removing bracket:

– Detach wheel housing liner in area of bumper.
– Move wiring bracket -2- clear.
– Remove nuts -arrows-.
– Detach bracket -1-.

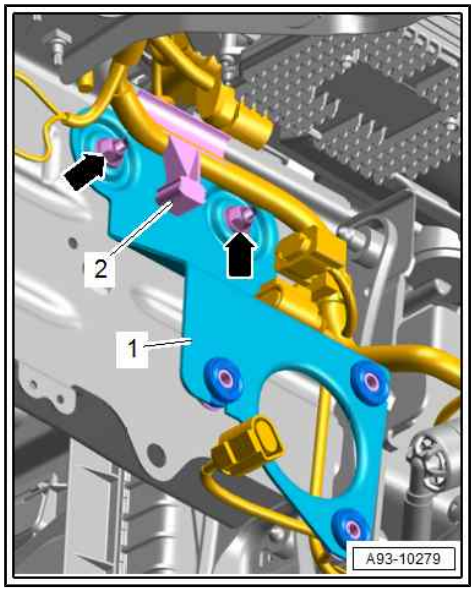

Installing

Installation is carried out in reverse sequence.

Tightening torques

◆ ⇒ “13.1 Overview of fitting locations - engine sound generation”, page 696

MUESTRA GRATUITA

Protected by copyright. Copying for private or commercial purposes, in part or in whole, is not permitted unless authorised by AUDI AG. AUDI AG does not guarantee or accept any liability with respect to the correctness of information in this document. Copyright by AUDI AG.

WWW.MULTIMANUALES.CL