
Alto
850mm
Fondo
660mm
Ancho
600mm

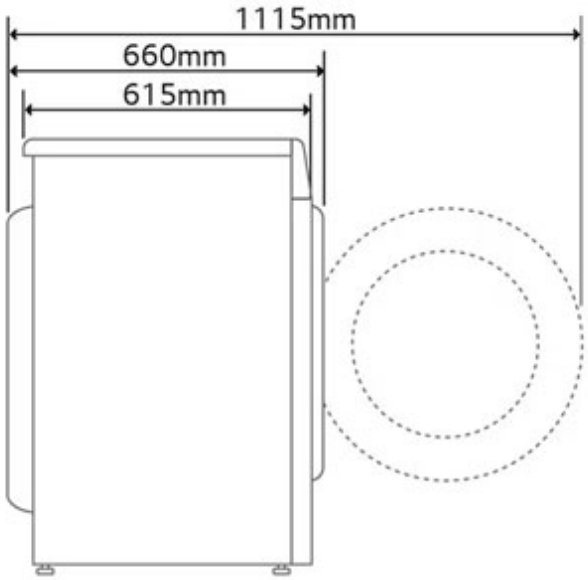
1115mm
660mm
615mm