Leak Detection | Spot Leak Detectors

SD, SD-R01, SD-Z & MX1

Spot Leak Detectors



SD, SD-R01, SD-Z and MX1 Spot Detectors detect conductive fluids at a single point for the most economical way to detect fluids in small, confined areas. These devices are commonly used in small rooms and in air-conditioning drip pans. Use only with SC conductive fluid leak detection cables.

Veris offers four models of spot detectors which can integrate with various building management systems.

Simple installation

Simple installation – screw, or ram-set to floor (SD, SD-R01, SD-Z)

Polymer coated

SD, SD-R01, SD-Z models have polymer-coated sensing probes... no exposed metal that will rust

Simple operation

Simple operation…no maintenance

Durability

All models are fully potted for water resistance…maximum durability

Solid-state design

No moving parts to fail

MODEL	DESCRIPTION
SD Spot Detector	• Operates on either 12 to 36 Vac or 18 to 36 Vdc power • Includes a 14 ft. (4.2 m) leader cable
SD-R01 Spot Detector with Relay Output	• Works with any system that accepts dry contacts • Operates on 24 Vac/dc ±10% • Automatically resets when conductive fluid is no longer present (AC power only; if DC power is used, device must be reset by disconnecting power momentarily) • Includes a 14 ft (4.2 m) leader cable
SD-Z Spot Detector	• Designed for use with all RLE detection panels, with SC sensing cable to integrate both zone and spot detection into one panel • Powered by the LD310, LD1000, LD5200, LDRA6, or LD2000 • When used with a distance read panel (LD2000 or LD5200), the location of the leak will be identified (simulates 50 feet) • Includes one male and one female end connector, each on a 1 ft (30 cm) lead wire
MX1 Spot Detector	• Battery operated

SPECIFICATIONS

SD, SD-R01, SD-Z

Input Power: SD-R01 Only	24 Vac/dc ±10%; 0.1 A max. (AC: 50/60 Hz)
Storage Environment	-20 to 70 °C (-4 to158 °F)
OUTPUTS	
Solid-state: SD Only	12 to 36 Vac@0.01 A min., 0.1 A max., 50/60 Hz; 18 to 36 Vdc@0.01 A min., 0.1 A max.
Relay: SD-R01 Only	Dry Contact, Form C; 1 A@24 Vdc, 0.5 A @120 Vac resistive
LEADER CABLE (NSC)	
Length: SD SD-R01 SD-Z	 14 ft. (4.2 m) 14 ft. (4.2 m) 10 ft. (0.3 m) (2 cables included)
Connector: SD-Z Only	1 male, 1 female; 4 pin, 0.96" (24.38 mm) diameter; connects to SC or NSC Cable
OPERATING ENVIRONMENT	
Temperature	0 to 50 °C (32 to 122 °F)
Humidity	5% to 95% RH non-condensing
Altitude	10,000 ft. (3,048 m) max.
WARRANTY	
Limited Warranty	2 years

SPECIFICATIONS

MX1

Input Power	Typical 10-year life lithium battery
Output	N.C. solid-state, (opens on alarm)
Output Rating	30 Vac/dc@0.1 A max., not polarity sensitive
Sensing Electrodes	Gold plated
OPERATING ENVIRONMENT	
Temperature	-20 to 80 °C (-4 to 176 °F)
Humidity	0 to 100% RH
Water Resistance	Not for continuous submersion
WARRANTY	
Limited Warranty	5 years

AGENCY APPROVALS

CE ETL LISTED 3037024

800.354.8556 | +1 503.598.4564 | sales@veris.com | intl@veris.com | www.veris.com

HQ0001797.H 0720

SD
Wiring Diagram

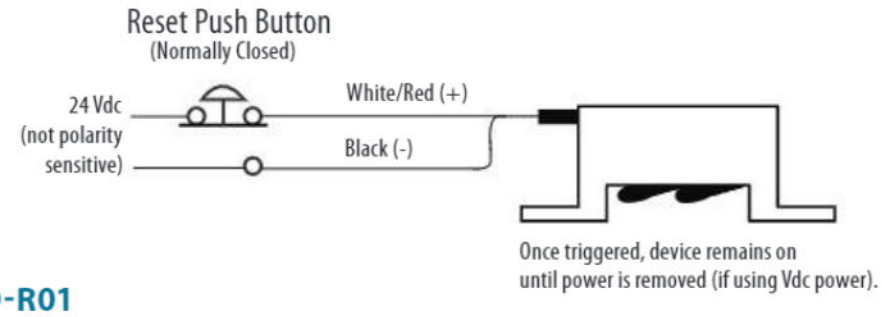

SD-R01
Wiring Diagram

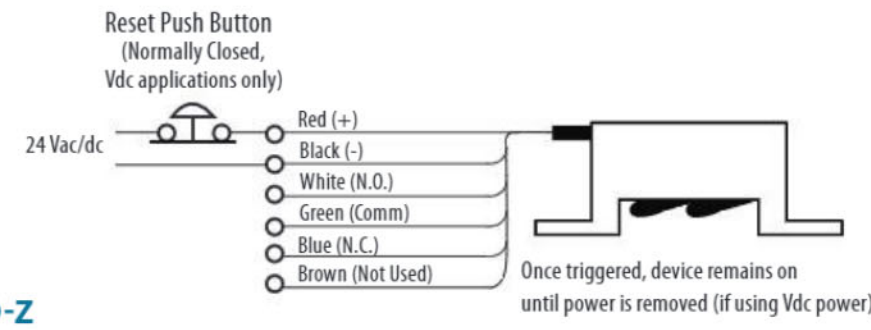

SD-Z
Wiring Diagram

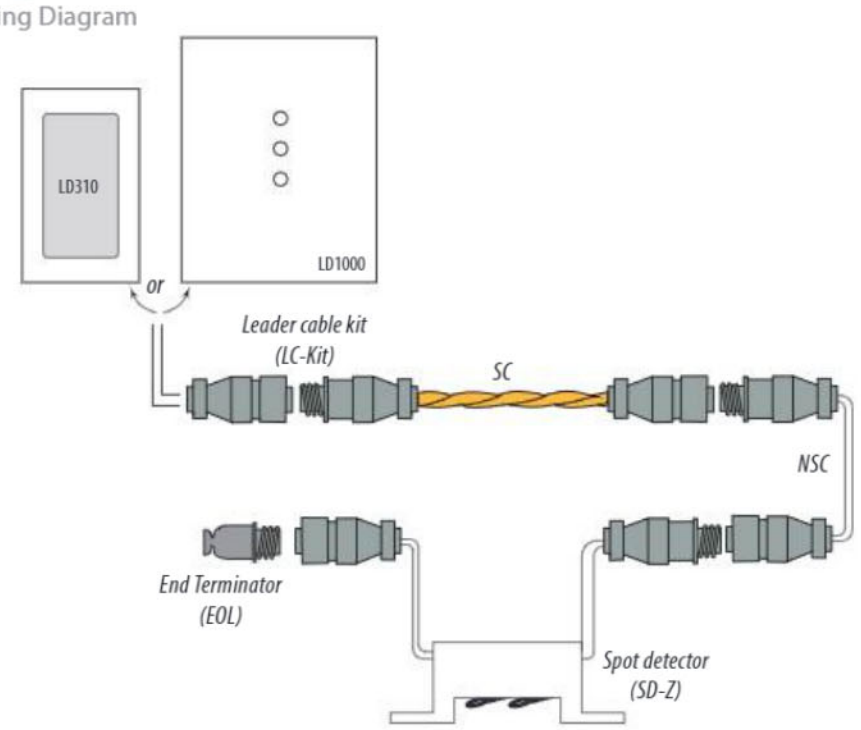

MX1 SERIES
Wiring Diagram

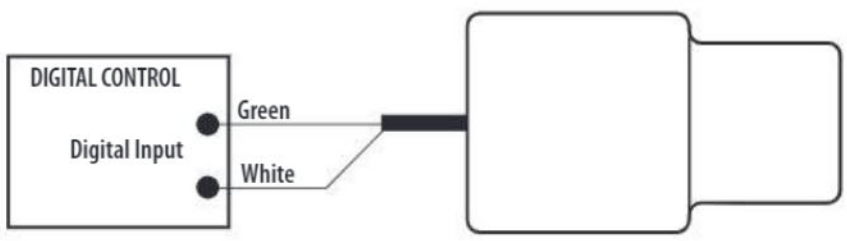

SD SERIES
Dimensional Drawing

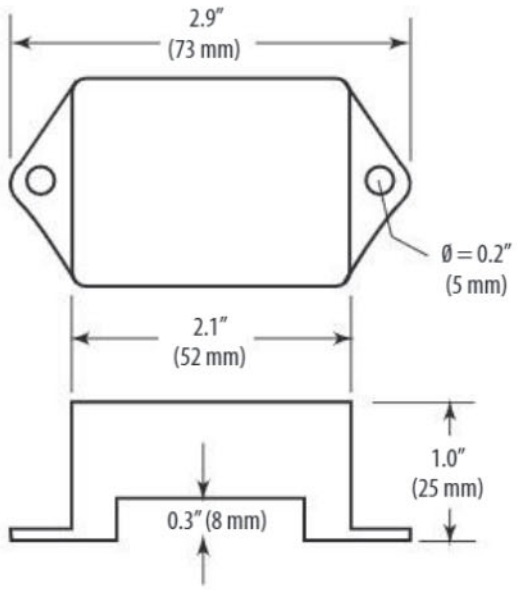

MX1 SERIES
Dimensional Drawing

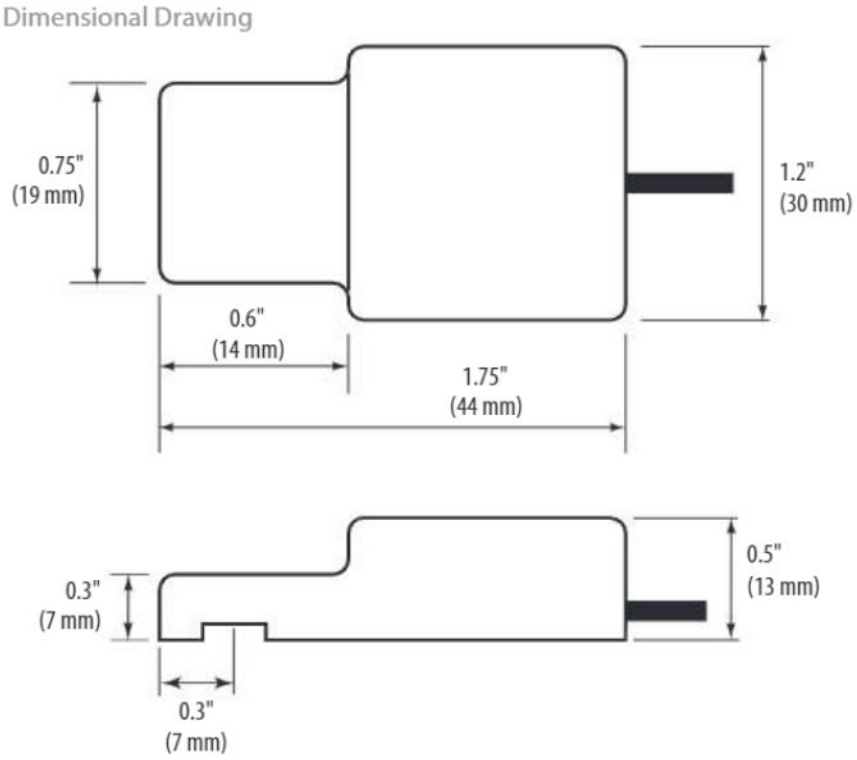

ORDERING INFORMATION

MODEL	MANUF. PART #	DESCRIPTION	CE	ETL
U006-0006	SD	Spot Detector, 14' leader cable	•	•
U006-0007	SD-R01	Spot Detector, 14' leader cable, relay out	•	•
U006-0008	SD-Z*	Spot Detector, 2x10" leader cable	•	•
MX1B	MX1B	Spot Detector, battery		

* The SD-Z uses DIN style connectors. Connect it via the LC-KIT, or integrate it into an LC-KIT-SC/NSC cable configuration.