MP-C

SmartX IP Controller



Introduction

SmartX IP Controller – MP-C is a multi-purpose, fully programmable, IP based field controller. The MP-C models offer a flexible mix of I/O point types that suit a wide range of HVAC applications. MP-C can either be used as a standalone BACnet/IP field controller or as part of an EcoStruxure BMS with a SmartX AS-P or AS-B server or an Enterprise Server as the parent server. The MP-C models support an optional display that provides insight and control of the inputs and outputs.

The MP-C has the following features:

- IP enabled with dual-port Ethernet switch
- Versatile onboard I/O point mix
- Highly available
- Sensor bus for living space sensors
- Mobile commissioning application
- Full EcoStruxure Building Operation software support, providing efficient engineering tools

IP connectivity and flexible network topologies

The SmartX IP controllers are based on open protocols that simplify interoperability, IP configuration, and device management:

- IP addressing
- BACnet/IP communications
- DHCP for easy network configuration

The SmartX IP controllers have a dual-port Ethernet switch, which enables flexible network topologies:

- Star
- Daisy chain
- Rapid Spanning Tree Protocol (RSTP) ring

In a star topology, the controller and the parent EcoStruxure BMS server are individually connected to an Ethernet switch. Daisy-chain multiple controllers together to reduce installation time and cost. Use an RSTP ring topology when you want a non-operational controller to be detected and recovered quickly and efficiently.

Models with a versatile mix of I/O points

MP-C comes in five models with different I/O point count and a versatile mix of I/O point types that match a wide variety of applications. The universal inputs/outputs are highly flexible and can be configured as either inputs or outputs.

03-30035-01-en, April 2019
© 2019 Schneider Electric. All rights reserved. Trademarks and registered trademarks are the property of their respective owners.

MP-C

SmartX IP Controller

I/O Point Types by MP-C Models

I/O Point Types	MP-C-15A	MP-C-18A	MP-C-18B	MP-C-24A	MP-C-36A
Universal I/O Type Ub	8	10	10	16	20
Universal I/O Type Uc	-	-	-	4	8
Triac outputs	6	4	8	-	-
Relay outputs Form A	-	3	-	4	8
High power relay outputs Form A	1	1	-	-	-

Configurations by I/O Point Types

Configurations	Universal I/O Type Ub	Universal I/O Type Uc	Triac Outputs	Relay Outputs Form A	High Power Relay Outputs Form A
Digital inputs	yes	yes	-	-	-
Counter inputs	yes	yes	-	-	-
Supervised inputs	yes	yes	-	-	-
Voltage inputs (0 to 10 VDC)	yes	yes	-	-	-
Current inputs (0 to 20 mA)	yes	yes	-	-	-
Temperature inputs	yes	yes	-	-	-
Resistive inputs	yes	yes	-	-	-
2-wire RTD temperature inputs	yes	yes	-	-	-
Voltage outputs (0 to 10 VDC)	yes	yes	-	-	-
Current outputs (0 to 20 mA)	-	yes	-	-	-
Digital outputs	-	-	yes	yes	yes
Digital pulsed outputs	-	-	yes	yes	yes

03-30035-01-en, April 2019
© 2019 Schneider Electric. All rights reserved. Trademarks and registered trademarks are the property of their respective owners.

MP-C

SmartX IP Controller

PWM outputs	-	-	yes	yes	yes
Tristate outputs	-	-	yes	yes	-
Tristate pulsed outputs	-	-	yes	yes	-

Universal inputs/outputs

The universal inputs/outputs are ideal for any mix of temperature, pressure, flow, status points, and similar point types in a building control system.

As counter inputs, the universal inputs/outputs are commonly used in energy metering applications. As RTD inputs, they are ideal for temperature points in a building control system. As supervised inputs, they are used for security applications where it is critical to know whether or not a wire has been cut or shorted. These events provide a separate indication of alarms and events in the system.

For all analog inputs, maximum and minimum levels can be defined to automatically detect over-range and under-range values.

The universal inputs/outputs can also be used as voltage outputs or current outputs (Uc only), without the need for external bias resistors. Therefore, the universal inputs/outputs support a wide range of devices, such as actuators.

Triac outputs

The triac outputs can be used in many applications to switch 24 VAC on or off for external loads such as actuators, relays, or indicators. The triac outputs are isolated from the controller. Triacs are silent and are not adversely affected by relay contact wear.

Relay outputs

The relay outputs support digital Form A point types. The Form A relays are designed for direct load applications.

High power relay output

MP-C-15A and MP-C-18A have a high power relay output, which is ideal for switching loads of up to 12 A, such as electrical heating elements.

I/O expansion

For applications that require more I/O resources, the SmartX IP Controller – IP-IO modules provide a versatile mix of I/O points for any application. For more information, see the SmartX IP Controller – IP-IO Specification Sheet.

Highly available

The SmartX IP controllers support local trends, schedules, and alarms, enabling local operation when the controller is offline or used in standalone applications.

With user-defined fallback values, the IP-IO outputs will be in a predictable state in cases of network disruption.

The battery-free power backup of the memory and real-time clock helps prevent data loss and allows seamless and quick recovery after a power disruption.

All MP-C models can be equipped with the MP-C Display add-on module, which features an LCD display and five keys. With this module, you can manually override analog and digital outputs for testing, commissioning, and maintenance of equipment connected to the outputs. The module's dedicated processing power ensures reliable override for maintenance applications. The override status can be viewed in EcoStruxure Building Operation WorkStation and WebStation, enabling precise monitoring and reliable control.



MP-C Display

In WorkStation, you to update the firmware of multiple SmartX IP controllers at the same time and with minimum down time. The EcoStruxure BMS server keeps track of the installed firmware to support backup, restore, and replacement of the controllers and sensors. The server can host controllers of different firmware versions.

03-30035-01-en, April 2019
© 2019 Schneider Electric. All rights reserved. Trademarks and registered trademarks are the property of their respective owners.

MP-C

SmartX IP Controller

Sensor bus for living space sensors

The SmartX IP controllers provide an interface designed for the SmartX Sensor family of living space sensors. The SmartX Sensors offer an efficient way to sense the temperature, humidity, CO_2, and occupancy in a room. The SmartX Sensors are available with different combinations of sensor types and various covers and user interface options, such as touchscreen, setpoint and override buttons, and blank covers.



SmartX Sensors

The sensor bus provides both power and communications for up to four sensors that are daisy-chained using standard Cat 5 (or higher) cables. The maximum number of sensors that can be connected to a controller varies depending on the sensor model and the combination of cover and sensor base type:

- Blank covers: Up to four sensors of any combination of sensor base types
- 3-button and touchscreen covers:
  - Up to two sensor bases with CO_2 option
  - Up to four sensor bases without CO_2 option
- SmartX LCD temperature sensors: Up to four sensors are supported

The maximum total length of the sensor bus is 61 m (200 ft). For more information, see the SmartX Living Space Sensors Specification Sheet.

Mobile commissioning application

The eCommission SmartX Controllers mobile application is designed for local configuration, field deployment, and commissioning of SmartX IP controllers. The mobile application reduces the commissioning time, allows flexibility in project execution, and minimizes dependencies on network infrastructure.

The mobile application is designed for use with Android, Apple (iOS), and Microsoft Windows 10 devices. For more information, see the eCommission SmartX Controllers Specification Sheet.

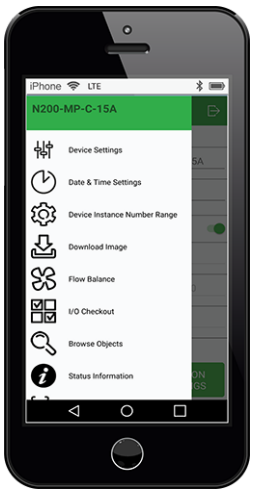

eCommission SmartX Controllers mobile app

Using the eCommission SmartX Controllers mobile application, you can connect to one or many MP Series controllers. You can connect to a single MP Series controller using the eCommission Bluetooth Adapter connected to a SmartX Sensor. Using a wireless access point or a network switch, you can connect to a network of MP Series controllers on the local IP network.

Device configuration

With the eCommission SmartX Controllers mobile application, you can easily discover SmartX IP controllers on the IP network. You can change the configuration of each controller, including the BACnet and IP network settings, location, and parent server. To save engineering time, you can save common device settings and then reuse them for controllers of the same model.

Field deployment and I/O checkout

The eCommission SmartX Controllers mobile application does not require an EcoStruxure BMS server or a network infrastructure to be in place. You can use the mobile application to load the controller application directly into the local MP Series controller and deploy the controller. The controller application can be created offline using Project Configuration Tool or WorkStation. You can also perform an I/O checkout to verify that the controller's I/O points are configured, wired, and operating correctly.

03-30035-01-en, April 2019
© 2019 Schneider Electric. All rights reserved. Trademarks and registered trademarks are the property of their respective owners.

MP-C

SmartX IP Controller

Full EcoStruxure Building Operation software support

The power of the MP Series controller is fully realized when it is part of an EcoStruxure BMS, which provides the following benefits:

- WorkStation/WebStation interface
- Script and Function Block programming options
- Device discovery
- Engineering efficiency

WorkStation/WebStation interface

WorkStation and WebStation provide a consistent user experience regardless of which EcoStruxure BMS server the user is logged on to. The user can log on to the parent EcoStruxure BMS server to engineer, commission, supervise, and monitor the SmartX IP controller and its I/O as well as its attached SmartX Sensors. For more information, see the WorkStation and WebStation specification sheets.

Script and Function Block programming options

Unique to the industry, the MP Series controllers have both Script and Function Block programming options. This flexibility assures that the best programming method can be selected for the application. Existing programs can easily be reused between the EcoStruxure BMS server and the controller.

Device discovery

The enhanced Device Discovery in WorkStation enables you to easily identify SmartX IP controllers on a BACnet network and to associate the controllers with their parent server.

Engineering efficiency

The engineering and maintenance of SmartX IP controllers can be done very efficiently using the EcoStruxure Building Operation reusability features. With these features, you can create library items (Custom Types) for a complete controller application that contains programs and all necessary objects such as trends, alarms, and schedules. The controller application in the Custom Types library is reusable across all controllers of the same model. You can use the controller application as a base for creating new controllers intended for similar applications. You can then edit the controller application, and the changes are automatically replicated to all controllers, while each controller keeps its local values.

WorkStation supports both online and offline engineering of SmartX IP controllers. You can make the configuration changes online or use database mode to make the changes offline. In database mode, the changes are saved to the EcoStruxure Building Operation database so that you can apply the changes to the controllers later.

Project Configuration Tool enables you to perform all the engineering off site, without the need for physical hardware, which minimizes the time you need to spend on site. You can run the EcoStruxure BMS servers virtually and engineer the SmartX IP controllers before you deploy your server and controller applications to the servers and controllers on site. For more information, see the Project Configuration Tool specification sheet.

In addition, you can use Automated Engineering Tool to facilitate your engineering process when using SmartX IP controllers. This tool provides access to a library of standard controller applications that can be quickly configured and customized using the wizards and mass edit functions provided in the tool. You can then load these customized applications into your target server. The tool also enables the quick creation of your own templates based on SmartX IP controller applications that you have developed. These templates facilitate a standard approach and easy reuse and duplication of common controller applications. For more information, see the Automated Engineering Tool specification sheet.

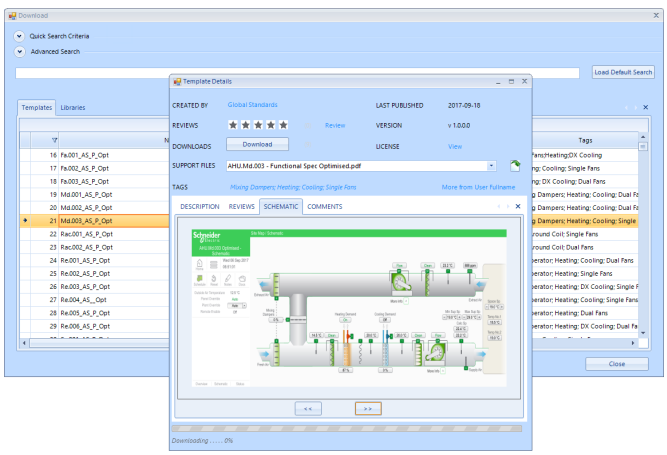

Library of standard HVAC applications

© 2019 Schneider Electric. All rights reserved. Trademarks and registered trademarks are the property of their respective owners.

Life Is On Schneider Electric

MP-C

SmartX IP Controller

Part Numbers

Product	Part number
MP-C-15A	SXWMPC15A10001
MP-C-18A	SXWMPC18A10001
MP-C-18B	SXWMPC18B10001
MP-C-24A	SXWMPC24A10001
MP-C-36A	SXWMPC36A10001
MP-C DISPLAY (MP-C override display module)	SXWMPCDSP10001
Spare terminal blocks for all MP-C models (4 x 3-pin, 1 x 4-pin, 7 x 6-pin, 2 x 8-pin terminal blocks)	SXWMPCCON10001
DIN-RAIL-CLIP, DIN-rail end clip package of 25 pieces	SXWDINEND10001
eCommission Bluetooth Adapter	SXWBTAECXX10001

Specifications

AC input

Nominal voltage .....24 VAC
Operating voltage range .....+/-20 %
Frequency .....50/60 Hz
Maximum power consumption (MP-C-15A, -18A, -18B) .....22 VA
Maximum power consumption (MP-C-24A) .....28 VA
Maximum power consumption (MP-C-36A) .....33 VA
Power input protection .....MOV suppression and internal fuse

DC input

Nominal voltage .....24 to 30 VDC
Operating voltage range .....21 to 33 VDC
Maximum power consumption (MP-C-15A, -18A, -18B) ..... 12 W
Maximum power consumption (MP-C-24A) ..... 15 W
Maximum power consumption (MP-C-36A) ..... 18 W
Power input protection .....MOV suppression and internal fuse

Environment

Ambient temperature, operating .....0 to 50 °C (32 to 122 °F) at normal operation[a]
.....-40 to +60 °C (-40 to +140 °F) for rooftop applications, horizontal installation only[a]
a) MP-C Display has an operating temperature range of -30 to +60 °C (-22 to +140 °F).
Ambient temperature, storage .....-40 to +70 °C (-40 to +158 °F)
Maximum humidity.....95 % RH non-condensing

03-30035-01-en, April 2019
© 2019 Schneider Electric. All rights reserved. Trademarks and registered trademarks are the property of their respective owners.

MP-C

SmartX IP Controller

Material

Plastic flame rating UL94-5V

Ingress protection rating ..... IP 20

Mechanical

Dimensions (MP-C-15A, -18A, -18B) ..... 153 W x 110 H x 64 D mm (6.0 W x 4.3 H x 2.5 D in.)

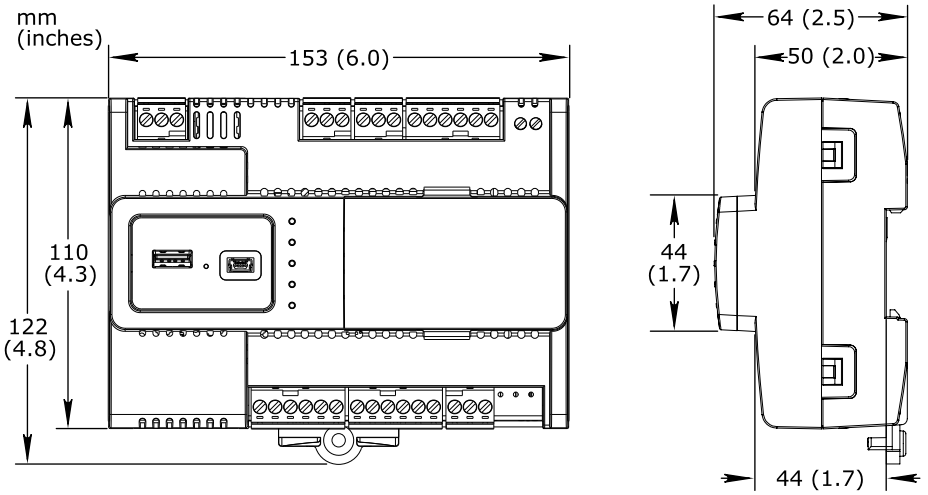

Dimensions (MP-C-24A, -36A) ..... 234 W x 110 H x 64 D mm (9.2 W x 4.3 H x 2.5 D in.)

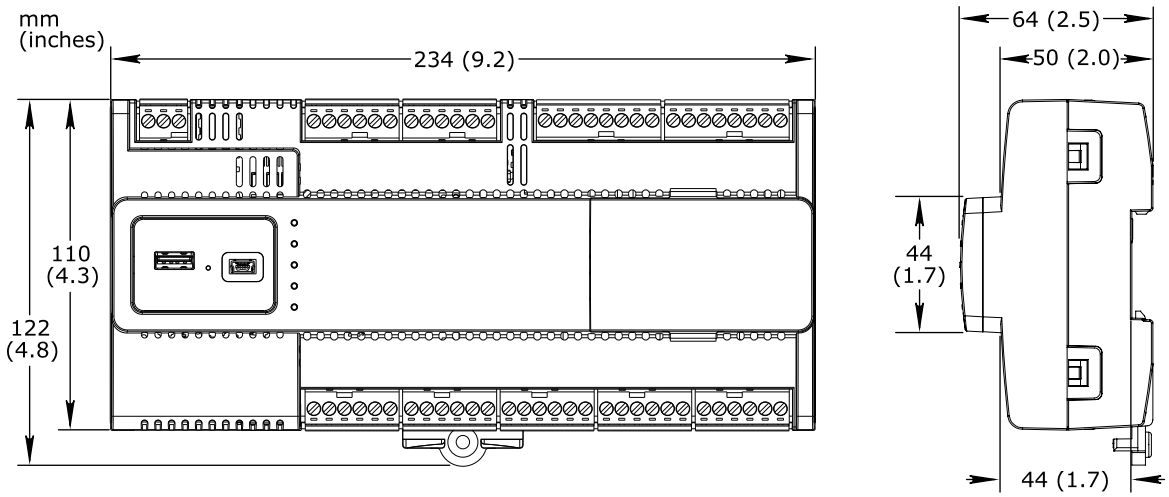

Weight, MP-C-15A
Including terminal blocks ..... 0.358 kg (0.789 lb)

Weight, MP-C-18A
Including terminal blocks ..... 0.371 kg (0.818 lb)

Weight, MP-C-18B
Including terminal blocks ..... 0.361 kg (0.796 lb)

Weight, MP-C-24A
Including terminal blocks ..... 0.495 kg (1.091 lb)

Weight, MP-C-36A
Including terminal blocks ..... 0.547 kg (1.206 lb)

© 2019 Schneider Electric. All rights reserved. Trademarks and registered trademarks are the property of their respective owners.
Life Is On Schneider Electric

MP-C

SmartX IP Controller

Installation .....DIN rail or other flat surface inside a cabinet
Terminal blocks .....Removable

Software compatibility

EcoStruxure Building Operation software .....version 2.0 or later

Agency compliances

Emission .....RCM; EN 61000-6-3; EN 50491-5-2; FCC Part 15, Sub-part B, Class B
Immunity .....EN 61000-6-2; EN 50491-5-3
Safety standards .....EN 60730-1; EN 60730-2-11; EN 50491-3; UL 916 C-UL US Listed

Real-time clock

Accuracy, at 25 °C (77 °F) .....+/-1 minute per month
Backup time, at 25 °C (77 °F) .....7 days minimum

Communication ports

Ethernet ..... Dual 10/100BASE-TX (RJ45)
USB .....1 USB 2.0 device port (mini-B)
.....1 USB 2.0 host port (type-A), 5 VDC, 2.5 W
Sensor Bus .....24 VDC, 2 W, RS-485 (RJ45)
Sensor Bus protection .....Transient voltage suppressors on communication and power signals

Communications

BACnet .....BACnet/IP, port configurable, default 47808
.....BTL B-AAC (BACnet Advanced Application Controller)[a]

a) See the BTL Product Catalog for up-to-date details on BTL listed firmware revisions on BACnet International's home page.

CPU

Frequency ..... 500 MHz
Type .....ARM Cortex-A7 dual-core
DDR3 SDRAM .....128 MB
NOR flash memory .....32 MB
Memory backup .....128 kB, FRAM, non-volatile

MP-C Display (Optional)

Removable .....No
Dimensions .....74 W x 46 H x 24 D mm (2.9 W x 1.8 H x 0.9 D in.)

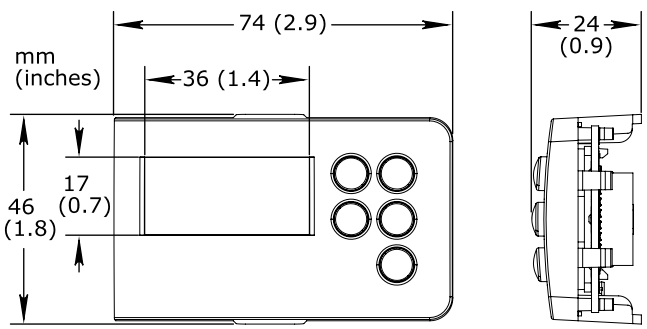

© 2019 Schneider Electric. All rights reserved. Trademarks and registered trademarks are the property of their respective owners.

MP-C

SmartX IP Controller

Display size ..... 36 W x 17 H mm (1.4 W x 0.7 H in.)
Display resolution ..... 128 x 64 pixels
Display type ..... FSTN monochrome LCD, white color transflective backlight
Power consumption ..... max. 0.15 W (45 mA at 3.3 V)
Ambient temperature, operating ..... -30 to +60 °C (-22 to +140 °F)
Ambient temperature, storage ..... -40 to +70 °C (-40 to +158 °F)
Maximum humidity ..... 95 % RH non-condensing
Weight ..... 0.035 kg (0.077 lb)
Compliance with standards ..... EN ISO 16484-2

Universal inputs/outputs, Ub and Uc

Channels, MP-C-15A ..... 8 Ub, Ub1 to Ub8
Channels, MP-C-18A ..... 10 Ub, Ub1 to Ub10
Channels, MP-C-18B ..... 10 Ub, Ub1 to Ub10
Channels, MP-C-24A ..... 16 Ub, Ub1 to Ub16
..... 4 Uc, Uc1 to Uc4
Channels, MP-C-36A ..... 20 Ub, Ub1 to Ub20
..... 8 Uc, Uc1 to Uc8
Absolute maximum ratings ..... -0.5 to +24 VDC
A/D converter resolution ..... 16 bits
Universal input/output protection ..... Transient voltage suppressor on each universal input/output

Digital inputs

Range ..... Dry contact switch closure or open collector/open drain, 24 VDC, typical wetting current 2.4 mA
Minimum pulse width ..... 150 ms

Counter inputs

Range ..... Dry contact switch closure or open collector/open drain, 24 VDC, typical wetting current 2.4 mA
Minimum pulse width ..... 20 ms
Maximum frequency ..... 25 Hz

Supervised inputs

5 V circuit, 1 or 2 resistors
Monitored switch combinations ..... Series only, parallel only, and series and parallel
Resistor range ..... 1 to 10 kohm
For a 2-resistor configuration, each resistor must have the same value +/- 5 %

Voltage inputs

Range ..... 0 to 10 VDC
Accuracy ..... +/-(7 mV + 0.2 % of reading)
Resolution ..... 1.0 mV
Impedance ..... 100 kohm

Current inputs

Range ..... 0 to 20 mA

03-30035-01-en, April 2019
© 2019 Schneider Electric. All rights reserved. Trademarks and registered trademarks are the property of their respective owners.

MP-C

SmartX IP Controller

Accuracy.....+/-(0.01 mA + 0.4 % of reading)
Resolution.....1 µA
Impedance .....47 ohm

Resistive inputs

10 ohm to 10 kohm accuracy .....+/-(7 + 4 x 10^{-3} x R) ohm
R = Resistance in ohm

10 kohm to 60 kohm accuracy .....+/-(4 x 10^{-3} x R + 7 x 10^{-8} x R^2) ohm
R = Resistance in ohm

Temperature inputs (thermistors)

Range.....-50 to +150 °C (-58 to +302 °F)

Supported thermistors

Honeywell .....20 kohm
Type I (Continuum) .....10 kohm
Type II (I/NET) .....10 kohm
Type III (Satchwell) .....10 kohm
Type IV (FD) ..... 10 kohm
Type V (FD w/ 11k shunt) .....Linearized 10 kohm
Satchwell D?T.....Linearized 10 kohm
Johnson Controls .....2.2 kohm
Xenta.....1.8 kohm
Balco.....1 kohm

Measurement accuracy

20 kohm.....-50 to -30 °C: +/-1.5 °C (-58 to -22 °F: +/-2.7 °F)
.....-30 to 0 °C: +/-0.5 °C (-22 to +32 °F: +/-0.9 °F)
..... 0 to 100 °C: +/-0.2 °C (32 to 212 °F: +/-0.4 °F)
.....100 to 150 °C: +/-0.5 °C (212 to 302 °F: +/-0.9 °F)

10 kohm, 2.2 kohm, and 1.8 kohm.....-50 to -30 °C: +/-0.75 °C (-58 to -22 °F: +/-1.35 °F)
.....-30 to +100 °C: +/-0.2 °C (-22 to +212 °F: +/-0.4 °F)
.....100 to 150 °C: +/-0.5 °C (212 to 302 °F: +/-0.9 °F)

Linearized 10 kohm .....-50 to -30 °C: +/-2.0 °C (-58 to -22 °F: +/-3.6 °F)
.....-30 to 0 °C: +/-0.75 °C (-22 to +32 °F: +/-1.35 °F)
..... 0 to 100 °C: +/-0.2 °C (32 to 212 °F: +/-0.4 °F)
.....100 to 150 °C: +/-0.5 °C (212 to 302 °F: +/-0.9 °F)

1 kohm .....-50 to +150 °C: +/-1.0 °C (-58 to +302° F: +/-1.8 °F)

RTD temperature inputs

Supported RTDs .....Pt1000, Ni1000, and LG-Ni1000

Pt1000

Sensor range.....-50 to +150 °C (-58 to +302 °F)

SmartX IP Controller device environment	Sensor range	Measurement accuracy
0 to 50 °C (32 to 122 °F)	-50 to +70 °C (-58 to +158 °F)	+/-0.5 °C (+/-0.9 °F)

03-30035-01-en, April 2019
© 2019 Schneider Electric. All rights reserved. Trademarks and registered trademarks are the property of their respective owners.

MP-C

SmartX IP Controller

Continued

SmartX IP Controller device environment	Sensor range	Measurement accuracy
0 to 50 °C (32 to 122 °F)	70 to 150 °C (158 to 302 °F)	+/-0.7 °C (+/-1.3 °F)
-40 to +60 °C (-40 to +140 °F)	-50 to +150 °C (-58 to +302 °F)	+/-1.0 °C (+/-1.8 °F)

Ni1000

Sensor range.....-50 to +150 °C (-58 to +302 °F)

SmartX IP Controller device environment	Sensor range	Measurement accuracy
0 to 50 °C (32 to 122 °F)	-50 to +150 °C (-58 to +302 °F)	+/-0.5 °C (+/-0.9 °F)
-40 to +60 °C (-40 to +140 °F)	-50 to +150 °C (-58 to +302 °F)	+/-0.5 °C (+/-0.9 °F)

LG-Ni1000

Sensor range.....-50 to +150 °C (-58 to +302 °F)

SmartX IP Controller device environment	Sensor range	Measurement accuracy
0 to 50 °C (32 to 122 °F)	-50 to +150 °C (-58 to +302 °F)	+/-0.5 °C (+/-0.9 °F)
-40 to +60 °C (-40 to +140 °F)	-50 to +150 °C (-58 to +302 °F)	+/-0.5 °C (+/-0.9 °F)

RTD temperature wiring

Maximum wire resistance.....20 ohm/wire (40 ohm total)

Maximum wire capacitance.....60 nF
The wire resistance and capacitance typically corresponds to a 200 m wire.

Voltage outputs

Range.....0 to 10 VDC

Accuracy.....+/-60 mV

Resolution.....10 mV

Minimum load resistance.....5 kohm

Load range.....-1 to +2 mA

Current outputs (Uc only)

Range.....0 to 20 mA

Accuracy.....+/-0.2 mA

Resolution.....21 µA

Load range.....0 to 650 ohm

Relay outputs, DO

Channels, MP-C-15A.....0

Channels, MP-C-18A.....3, DO5 to DO7

Channels, MP-C-18B.....0

Channels, MP-C-24A.....4, DO1 to DO4

Channels, MP-C-36A.....8, DO1 to DO8

03-30035-01-en, April 2019
© 2019 Schneider Electric. All rights reserved. Trademarks and registered trademarks are the property of their respective owners.

MP-C

SmartX IP Controller

Contact rating.....250 VAC/30 VDC, 2 A, Pilot Duty (C300)
Switch type.....Form A Relay
.....Single Pole Single Throw
.....Normally Open
Isolation contact to system ground.....3000 VAC
Cycle life (Resistive load) .....At least 100,000 cycles
Minimum pulse width .....100 ms

High power relay outputs, DO

Channels, MP-C-15A 1, DO7
Channels, MP-C-18A 1, DO8
Channels, MP-C-18B 0
Channels, MP-C-24A 0
Channels, MP-C-36A 0
Contact rating.....250 VAC/24 VDC, 12 A, Pilot Duty (B300)
Switch type.....Form A Relay
.....Single Pole Single Throw
.....Normally Open
Isolation contact to system ground.....5000 VAC
Cycle life (Resistive load) .....At least 100,000 cycles
Minimum pulse width .....100 ms

Triac outputs, DO

Channels, MP-C-15A ..... 6, DO1 to DO6
Channels, MP-C-18A ..... 4, DO1 to DO4
Channels, MP-C-18B ..... 8, DO1 to DO8
Channels, MP-C-24A 0
Channels, MP-C-36A 0
Output rating (for each triac output) .....Max. 0.5 A
Voltage.....24 VAC +/-20 %
Commons .....COM1 for DO1 and DO2 (on MP-C-15A, -18A, -18B)
.....COM2 for DO3 and DO4 (on MP-C-15A, -18A, -18B)
.....COM3 for DO5 and DO6 (on MP-C-15A, -18B)
.....COM4 for DO7 and DO8 (on MP-C-18B only)
The common terminals can be connected to 24 VAC or to ground.
Common voltage, high side output.....24 VAC
Common voltage, low side output .....0 VAC (ground)
Minimum pulse width .....100 ms
Triac output protection .....MOV and snubber across each triac output
.....MOV from triac COM to ground

03-30035-01-en, April 2019
© 2019 Schneider Electric. All rights reserved. Trademarks and registered trademarks are the property of their respective owners.

MP-C

SmartX IP Controller

Terminals

Follow proper installation wiring diagrams and instructions, including these instructions:

- All MP-C models have several RET terminals for connection of I/O returns, so a common chassis/signal ground rail is optional and may not be needed.
- Individual 24 VDC power sources to the field must be current limited to maximum 4 A for UL compliant installations, and maximum 6 A in other areas.
- For more information on wiring, see Hardware Reference Guide.

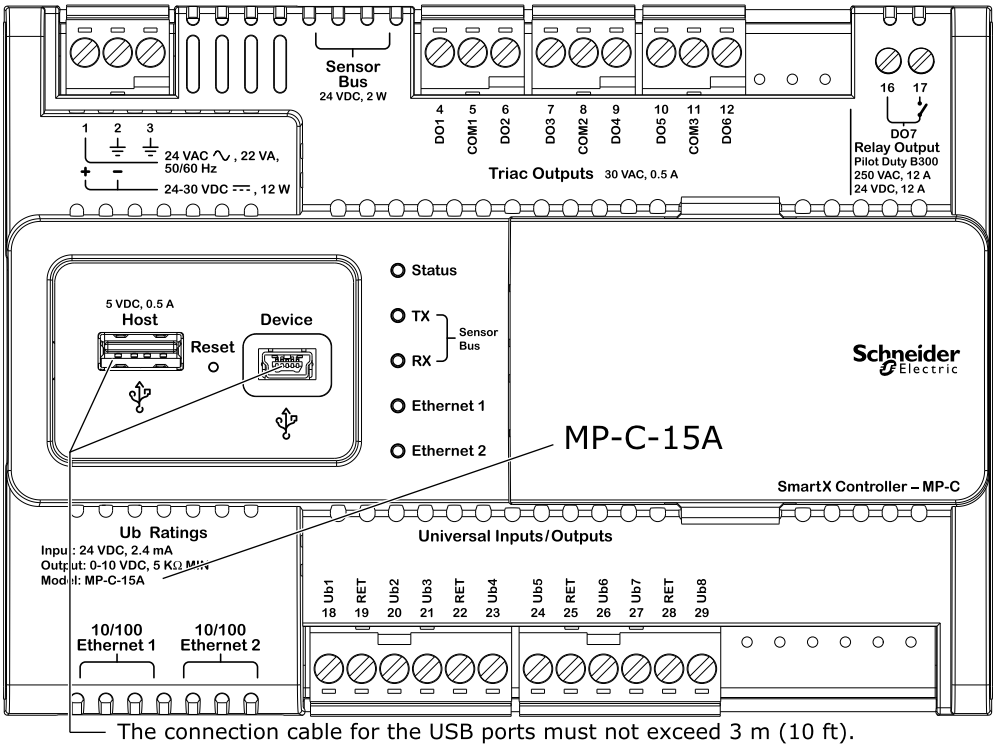

MP-C-15A

© 2019 Schneider Electric. All rights reserved. Trademarks and registered trademarks are the property of their respective owners.

MP-C

SmartX IP Controller

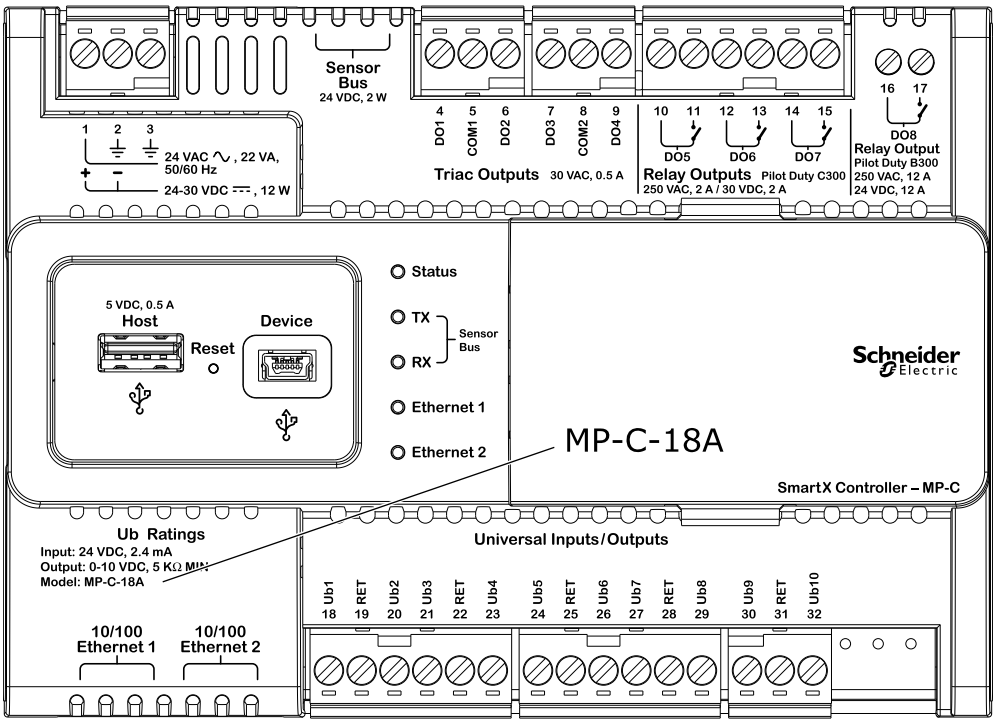

MP-C-18A

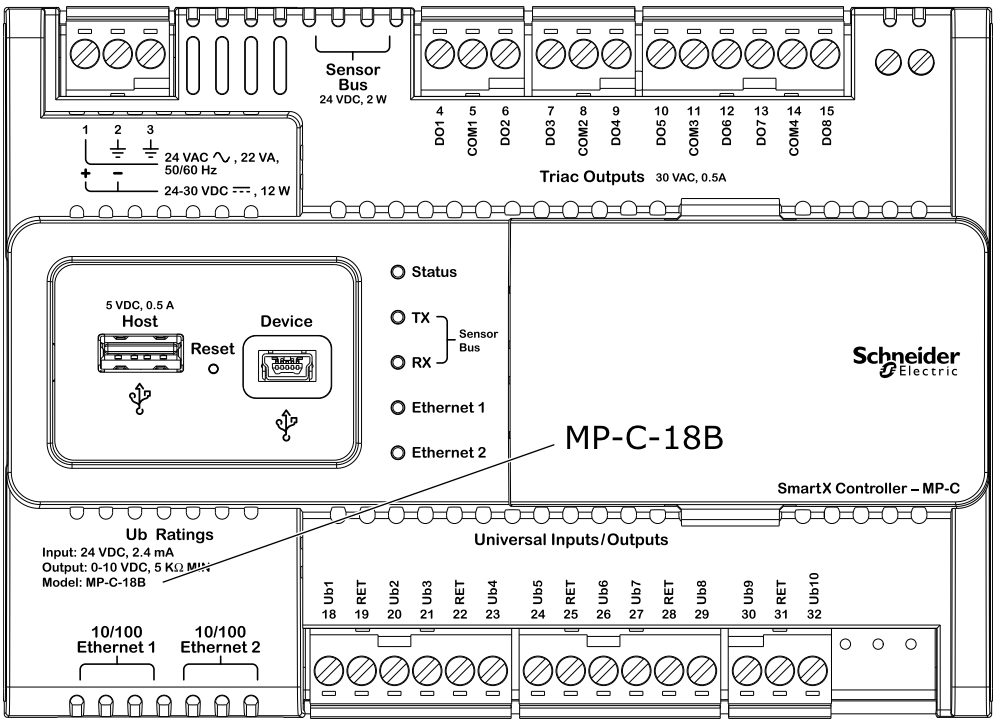

MP-C-18B

© 2019 Schneider Electric. All rights reserved. Trademarks and registered trademarks are the property of their respective owners.

MP-C

SmartX IP Controller

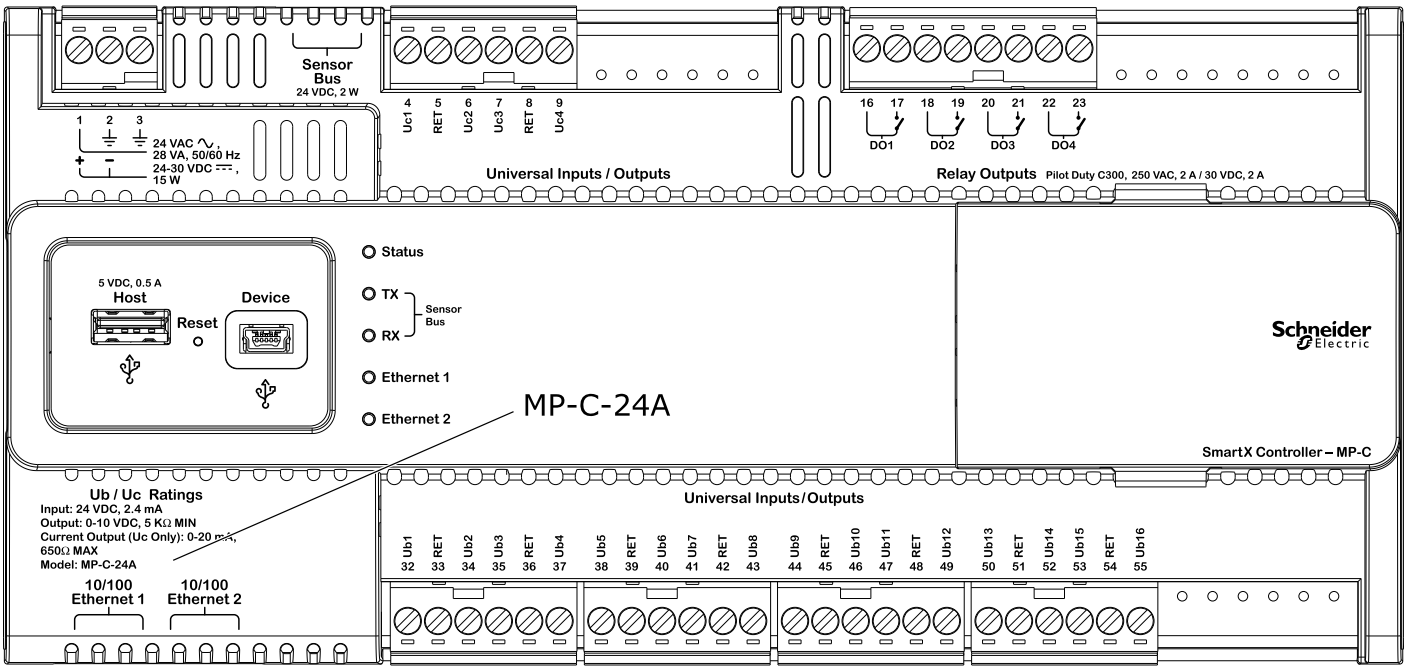

MP-C-24A

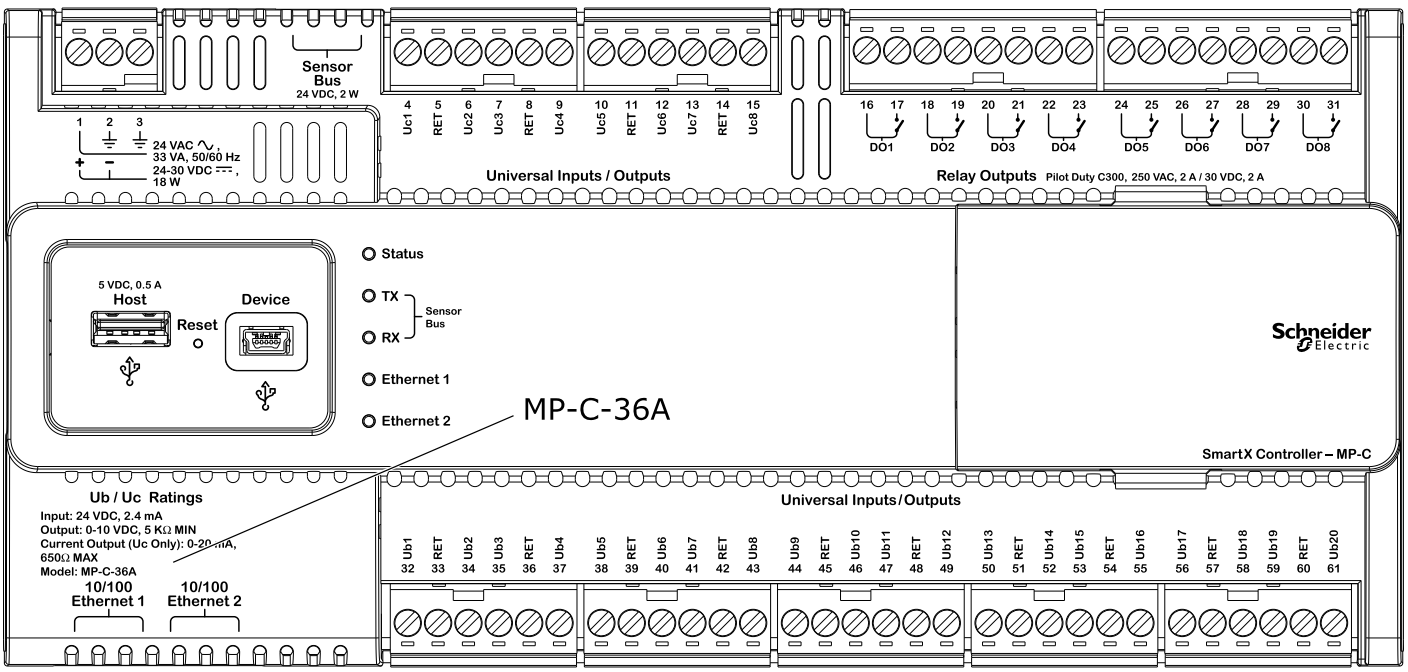

MP-C-36A

03-30035-01-en, April 2019
© 2019 Schneider Electric. All rights reserved. Trademarks and registered trademarks are the property of their respective owners.

MP-C
SmartX IP Controller

Part Numbers in AMER Region for Network Connectivity Accessories

Product description[a]	Part number (AMER region)
Cat 6 field-term plug, UTP	ACTPG6TLU001
Cat 6 pass-through plug, UTP, 100-pack	ACTPG6PTU100
Actassi crimping tool	ACTTLCPT
Cat 6 cable, UTP, 1000 ft (305 m), CMP, green	ACT4P6UCP1ARXGR
Cat 6 patch cord, UTP, 30 ft (9 m), CMP, green	ACTPC6UBCP30AGR
Cat 6 patch cord, UTP, 50 ft (15 m), CMP, green	ACTPC6UBCP50AGR
Cat 6 patch cord, UTP, 70 ft (21 m), CMP, green	ACTPC6UBCP70AGR
Cat 6 patch cord, UTP, 90 ft (27 m), CMP, green	ACTPC6UBCP90AGR
Cat 5e pass-through plug, UTP, 100-pack	ACTPG5EPTU100
Cat 5e cable, UTP, 1000 ft (305 m), CMP, green	ACT4P5EUCP1ARXGR
Cat 5e patch cord, UTP, 30 ft (9 m), CMP, green	ACTPC5EUBCP30AGR
Cat 5e patch cord, UTP, 50 ft (15 m), CMP, green	ACTPC5EUBCP50AGR
Cat 5e patch cord, UTP, 70 ft (21 m), CMP, green	ACTPC5EUBCP70AGR
Cat 5e patch cord, UTP, 90 ft (27 m), CMP, green	ACTPC5EUBCP90AGR

a) For more information, see the Product Selection Guide (SmartX IP Controllers - Accessories). Abbreviations: UTP (Unshielded Twisted Pair), CMP (Plenum-rated cable)

Part Numbers in EMEA Region for Network Connectivity Accessories

Product description[a]	Part number (EMEA region)
Cat 6 field-term plug, UTP	ACTPG6TLU001
Cat 6 pass-through plug, UTP, 100-pack	ACTPG6PTU100
Actassi crimping tool	ACTTLCPT
Cat 6 cable, UTP, 305 m (1000 ft), Euroclass D, green	VDICD116118
Cat 6 patch cord, UTP, 10 m (32 ft), LSZH, green	ACTPC6UBLS100GR
Cat 6 patch cord, UTP, 15 m (49 ft), LSZH, green	ACTPC6UBLS150GR
Cat 6 patch cord, UTP, 20 m (65 ft), LSZH, green	ACTPC6UBLS200GR
Cat 6 patch cord, UTP, 25 m (82 ft), LSZH, green	ACTPC6UBLS250GR
Cat 5e pass-through plug, UTP, 100-pack	ACTPG5EPTU100
Cat 5e cable, UTP, 1000 ft (305 m), Euroclass D, green	VDICD115118
Cat 5e patch cord, UTP, 10 m (32 ft), LSZH, green	ACTPC5EUBLS100GR
Cat 5e patch cord, UTP, 15 m (49 ft), LSZH, green	ACTPC5EUBLS150GR
Cat 5e patch cord, UTP, 20 m (65 ft), LSZH, green	ACTPC5EUBLS200GR
Cat 5e patch cord, UTP, 25 m (82 ft), LSZH, green	ACTPC5EUBLS250GR

a) For more information, see the Product Selection Guide (SmartX IP Controllers - Accessories). Abbreviations: UTP (Unshielded Twisted Pair), CMP (Plenum-rated cable), LSZH (Low Smoke Zero Halogen)

03-30035-01-en, April 2019
© 2019 Schneider Electric. All rights reserved. Trademarks and registered trademarks are the property of their respective owners.

MP-C

SmartX IP Controller

Part Numbers in Pacific Region for Network Connectivity Accessories

Product description[a]	Part number (Pacific region)
Cat 6 field-term plug, UTP	ACTPG6TLU001
Cat 6 pass-through plug, UTP, 100-pack	ACTPG6PTU100
Actassi crimping tool	ACTTLCPT
Cat 6 cable, UTP, 305 m (1000 ft), PVC, green	2D4P6IPV3B-GR
Cat 6 patch lead, UTP, 10 m (32 ft), PVC, green	RJ6_100PL-GR
Cat 6 patch lead, UTP, 15 m (49 ft), PVC, green	RJ6_150PL-GR
Cat 6 patch lead, UTP, 20 m (65 ft), PVC, green	RJ6_200PL-GR
Cat 6 patch lead, UTP, 25 m (82 ft), PVC, green	RJ6_250PL-GR
Cat 5e pass-through plug, UTP, 100-pack	ACTPG5EPTU100
Cat 5e cable, UTP, 305 m (1000 ft), PVC, green	2D4P5IPV3B-GR
Cat 5e patch lead, UTP, 10 m (32 ft), PVC, green	RJ5_100PL-GR
Cat 5e patch lead, UTP, 15 m (49 ft), PVC, green	RJ5_150PL-GR
Cat 5e patch lead, UTP, 20 m (65 ft), PVC, green	RJ5_200PL-GR
Cat 5e patch lead, UTP, 25 m (82 ft), PVC, green	RJ5_250PL-GR

a) For more information, see the Product Selection Guide (SmartX IP Controllers - Accessories). Abbreviations: UTP (Unshielded Twisted Pair), PVC (Polyvinyl chloride)

Regulatory Notices

Federal Communications Commission
FCC Rules and Regulations CFR 47, Part 15, Class B
This device complies with part 15 of the FCC Rules. Operation is subject to the following two conditions: (1) This device may not cause harmful interference. (2) This device must accept any interference received, including interference that may cause undesired operation.

Industry Canada
This Class B digital apparatus complies with Canadian ICES-003.
Cet appareil numérique de la classe B est conforme à la norme NMB-003 du Canada.

Regulatory Compliance Mark (RCM) - Australian Communications and Media Authority (ACMA)
This equipment complies with the requirements of the relevant ACMA standards made under the Radiocommunications Act 1992 and the Telecommunications Act 1997. These standards are referenced in notices made under section 182 of the Radiocommunications Act and 407 of the Telecommunications Act.

CE - Compliance to European Union (EU)
2014/30/EU Electromagnetic Compatibility Directive
2014/35/EU Low Voltage Directive
2011/65/EU Restriction of Hazardous Substances (RoHS) Directive
2015/863/EU amending Annex II to Directive 2011/65/EU
This equipment complies with the rules, of the Official Journal of the European Union, for governing the Self Declaration of the CE Marking for the European Union as specified in the above directive(s) per the provisions of the following standards: EN 60730-1, EN 60730-2-11, and EN 50491-3 Safety Standards.

WEEE - Directive of the European Union (EU)
This equipment and its packaging carry the waste of electrical and electronic equipment (WEEE) label, in compliance with European Union (EU) Directive 2012/19/EU, governing the disposal and recycling of electrical and electronic equipment in the European community.

UL 916 Listed products for the United States and Canada, Open Class Energy Management Equipment. UL file E80146.

Life Is On Schneider Electric

www.schneider-electric.com

03-30035-01-en, April 2019
© 2019 Schneider Electric. All rights reserved. Trademarks and registered trademarks are the property of their respective owners.