

2x



1x

A.X1PC 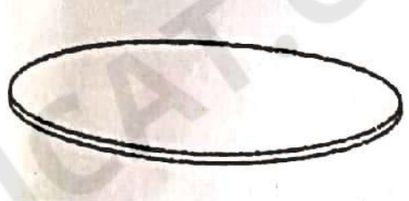	B.X2PCS 	C.X1PC 	D.X1PC 	E.X2PCS 
F.X9PCS	G.X4PCS 	H.X5PCS 	I.X4PCS 	

1

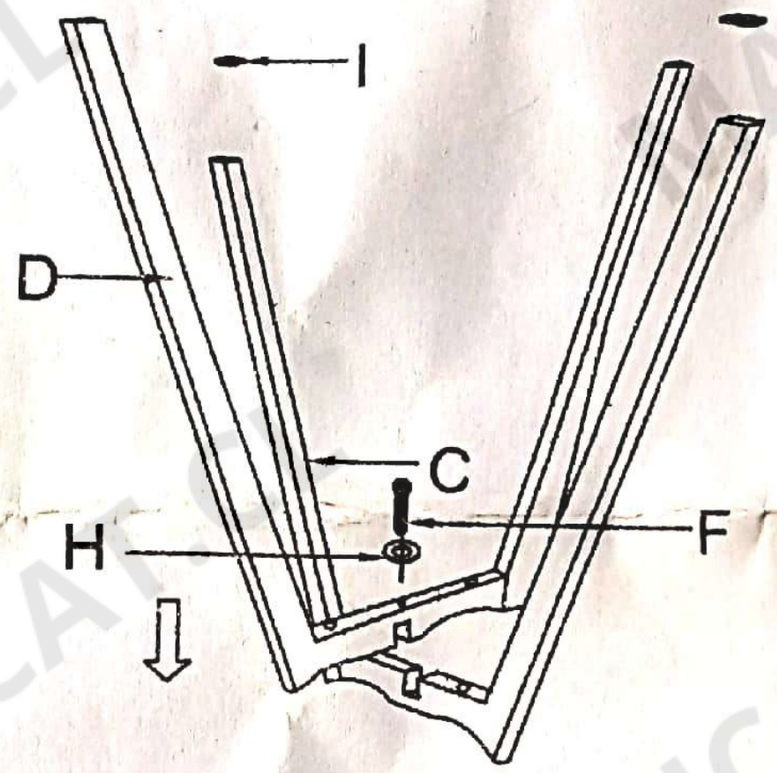

2

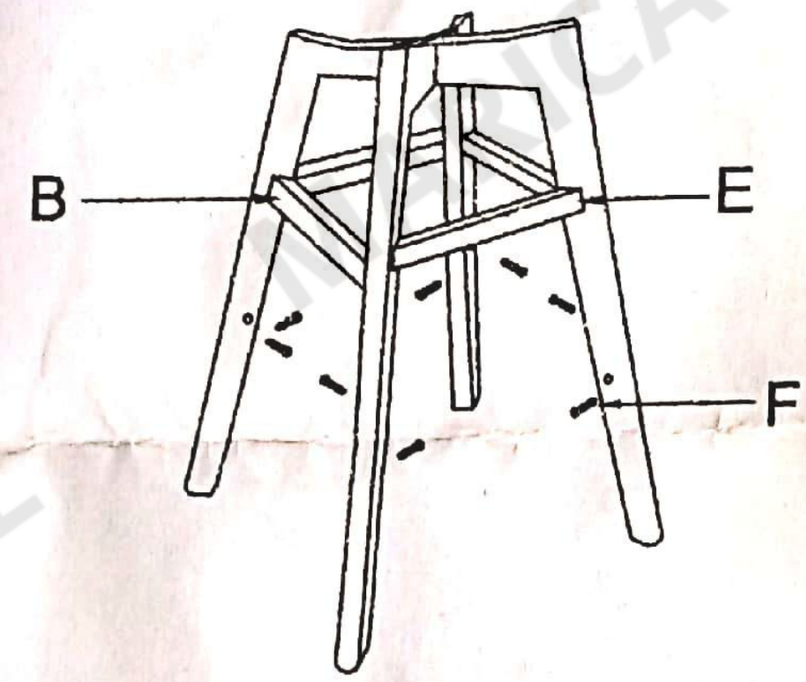

3

