UniFi Network USW Pro

DATASHEET

Gigabit Switches with Layer 3 Features and SFP+

SFP+ Ports for 10G Links

Layer 3 Support

1.3" Color Touchscreen Display

Models: USW-Pro-24, USW-Pro-48

Overview

Expand and power your network with the UniFi® Pro Switch, part of the Ubiquiti® UniFi Enterprise System. It is available in two models:

- **USW-Pro-24** 24 RJ45 ports with 2 SFP+ ports
- **USW-Pro-48** 48 RJ45 ports with 4 SFP+ ports

Fanless, Silent Cooling

The passive cooling design allows the UniFi Pro Switch to be located in any workspace.

Fiber Connectivity

SFP+ ports enable high-capacity uplinks of up to 10 Gbps, so you can directly connect to a high-performance storage server or deploy a long-distance uplink to another switch.

Layer 3 Features

In addition to Layer 2 switching protocols and features, the UniFi Pro Switch offers Layer 3 capabilities, such as inter-VLAN routing, static routing, and DHCP server functionality.

Switching Performance

The UniFi Pro Switch offers the forwarding capacity to simultaneously process traffic on all ports at line rate without any packet loss.

Power Supply Redundancy

The UniFi Pro Switch supports our PSU failover system, the UniFi SmartPower RPS, model USP-RPS. If the internal power supply unit fails, the proprietary USP RPS interface acts to provide redundant power for backup*.

** Requires use of the USP-RPS (coming soon).*

Deployment Example

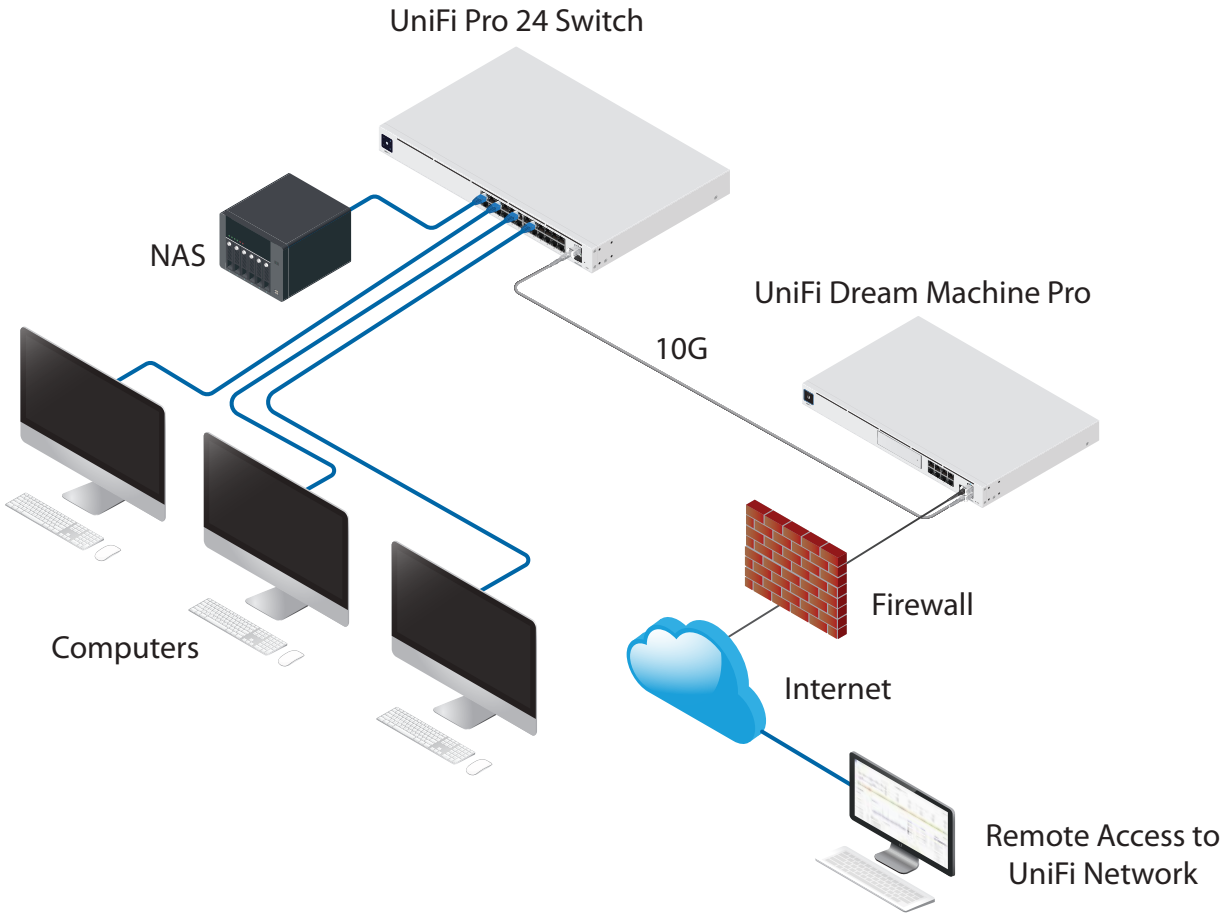

Via its Gigabit RJ45 and SFP+ ports, the UniFi Pro 24 Switch connects a variety of devices to the local network.

UniFi Pro 24-Port Switch

- (24) Gigabit RJ45 ports
- (2) 1/10G SFP+ ports
- 1U Rackmountable (hardware included)

USW-Pro-24

UniFi Pro 48-Port Switch

- (48) Gigabit RJ45 ports
- (4) 1/10G SFP+ ports
- 1U Rackmountable (hardware included)

USW-Pro-48

Innovative Display

The 1.3" touchscreen displays status information for easy monitoring and quick troubleshooting.

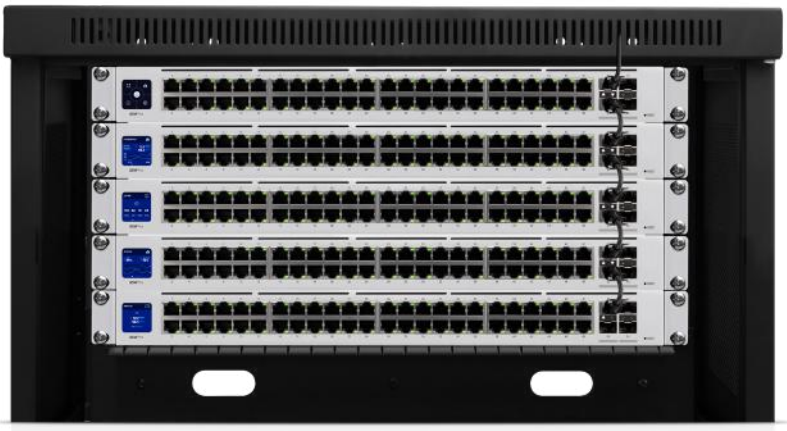

Scalable UniFi Network Controller

Management Capabilities

The UniFi Network Controller can provision UniFi devices, map out networks, and quickly manage system traffic. Important network details are logically organized for a simplified, yet powerful, interface.

Network Overview

From a single pane of glass, view network topology and configuration, real-time statistics, and debugging metrics. Monitor your network's vitals and make on-the-fly adjustments as needed.

Deep Packet Inspection

Ubiquiti's proprietary Deep Packet Inspection (DPI) engine includes the latest application identification signatures to track which applications (and IP addresses) are using the most bandwidth.

Detailed Analytics

The UniFi Network Controller provides configurable reporting and analytics to manage large user populations and expedite troubleshooting. Advanced search and sorting capabilities make network management more efficient.

Multi-Site Management

A single controller running in the cloud can manage multiple sites: multiple, distributed deployments and multi-tenancy for managed service providers. Each site is logically separated and has its own configuration, maps, statistics, guest portal, and administrator accounts.

Switch Configuration

You can access any managed UniFi Switch* through the UniFi Controller to configure a variety of features:

- Operation mode (switching, mirroring, or aggregate) per port
- Network/VLAN configuration
- Jumbo frame and flow control services
- Network settings
- Storm control setting per port
- Spanning tree configuration
- 802.1X control and RADIUS VLAN
- Debug terminal option for command-line interface

Switch Port Status

You can also view status information for each port:

- Connection speed and duplex mode
- TX/RX data rates
- Network/VLAN setting

Software Features

The UniFi Network Controller software offers the following features:

- Centralized configuration management (including configuration cloning)
- Auto-MDIX automatically adjusts as needed for straight through or crossover cable
- 802.1X (RADIUS) authentication and dynamic VLAN

** For the USW-Pro-24 and USW-Pro-48, the minimum controller version is 5.12.9.*

Download on the App Store

GET IT ON Google Play

USW-Pro-24	
Dimensions	442.4 x 285.4 x 43.7 mm (17.42 x 11.24 x 1.72")
Weight With Brackets	3.50 kg (7.72 lb) 3.59 kg (7.92 lb)
Interfaces Networking Management	 (24) 10/100/1000 RJ45 Ports (2) 1/10G SFP+ Ethernet Ports Ethernet In-Band
Total Non-Blocking Throughput	44 Gbps
Switching Capacity	88 Gbps
Forwarding Rate	65.472 Mpps
Power Method Universal Input USP RPS DC Input	 100-240VAC, 50/60 Hz 11.5VDC, 2.61A
Power Supply	AC/DC, Internal, 36W
Voltage Range	100 to 240VAC
Max Power Consumption	30W
LEDs RJ45 Data Ports SFP+ Data Ports	 Speed/Link/Activity Link/Activity
ESD/EMP Protection	Air: ± 16 kV, Contact: ± 12 kV
Shock and Vibration	ETSI300-019-1.4 Standard
Operating Temperature	-5 to 45° C (23 to 113° F)
Operating Humidity	10 - 90% Noncondensing
Certifications	CE, FCC, IC

USW-Pro-48	
Dimensions	442.4 x 285.4 x 43.7 mm (17.42 x 11.24 x 1.72")
Weight With Brackets	4.00 kg (8.82 lb) 4.09 kg (9.02 lb)
Interfaces Networking Management	 (48) 10/100/1000 RJ45 Ports (4) 1/10G SFP+ Ethernet Ports Ethernet In-Band
Total Non-Blocking Throughput	88 Gbps
Switching Capacity	176 Gbps
Forwarding Rate	130.944 Mpps
Power Method Universal Input USP RPS DC Input	 100-240VAC, 50/60 Hz 11.5VDC, 5.22A
Power Supply	AC/DC, Internal, 60W
Voltage Range	100 to 240VAC
Max Power Consumption	60W
LEDs RJ45 Data Ports SFP+ Data Ports	 Speed/Link/Activity Link/Activity
ESD/EMP Protection	Air: ± 16 kV, Contact: ± 12 kV
Shock and Vibration	ETSI300-019-1.4 Standard
Operating Temperature	-5 to 45° C (23 to 113° F)
Operating Humidity	10 - 90% Noncondensing
Certifications	CE, FCC, IC

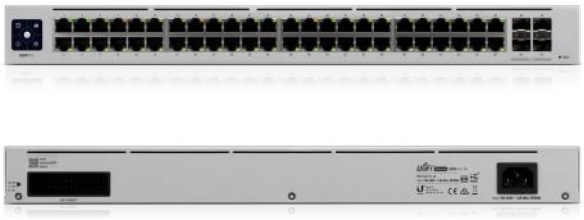

Specifications are subject to change. Ubiquiti products are sold with a limited warranty described at: ui.com/support/warranty
The limited warranty requires the use of arbitration to resolve disputes on an individual basis, and, where applicable, specify arbitration instead of jury trials or class actions.
©2019-2020 Ubiquiti Inc. All rights reserved. Ubiquiti, Ubiquiti Networks, the Ubiquiti U logo, the Ubiquiti beam logo, and UniFi are trademarks or registered trademarks of Ubiquiti Inc. in the United States and in other countries. Apple and the Apple logo are trademarks of Apple Inc., registered in the U.S. and other countries. App Store is a service mark of Apple Inc., registered in the U.S. and other countries. Android, Google, Google Play, the Google Play logo and other marks are trademarks of Google LLC. All other trademarks are the property of their respective owners.

JL031820