# ProLine

## PROLINE FRAME ACCESSORIES



A Dress Frame provides a decorative trim when a front door or cover is not used. The dress frame can be installed:

- For single bay frame on the front or rear
- For double bay frame only on the rear.

The painted steel dress frame, finished with RAL 7035 textured, light-gray polyester powder paint, is provided with a snap-in design for easy installation with no tools required.

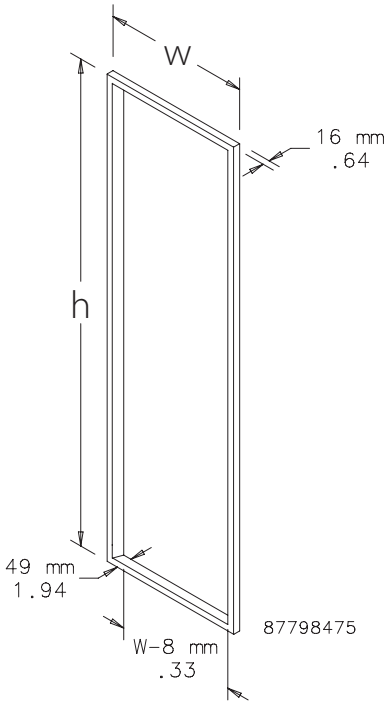


| Item number | Nominal Frame Size H x W [mm] | h [mm] | w [mm] |
|---|---|---|---|
| PDF146 | 1400 x 600 | 1339 | 591 |
| PDF166 | 1600 x 600 | 1539 | 591 |
| PDF186 | 1800 x 600 | 1739 | 591 |
| PDF206 | 2000 x 600 | 1939 | 591 |
| PDF226 | 2200 x 600 | 2139 | 591 |

### FRAME JOINING KITS

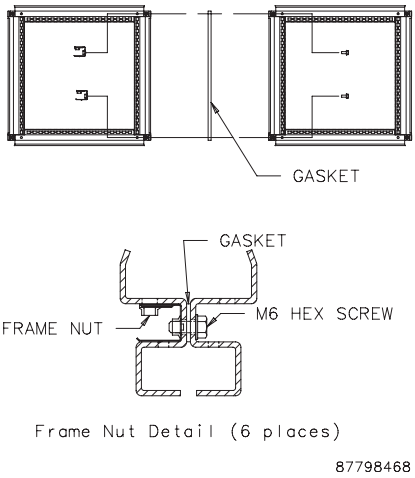


Standard Frame Joining Kit permits joining two enclosure frames while maintaining an environmental seal. The kit consists of six frame nuts and screws, as well as gasket material to maintain a dust-tight and water-tight seal between ganged frames. Can be used if rack angles are not in the front or rearmost positions, or if a mounting plate is not in the rearmost position.

| Item number | Description |
|---|---|
| PJ2F | Standard Frame Joining, Side-to-Side |
| PJ2FBF | Standard Frame Joining, Front-to-Back |

### L JOINING BRACKET



The L Joining Bracket, made of 3,0 mm steel, is used in conjunction with the standard joining kit as additional support. Pictured hardware is included.

| Item number | Description |
|---|---|
| PJB2F | L Joining Bracket |

# ProLine Frame Accessories

## LIFTING EYES



Lifting Eyes are used for lifting ProLine modular frames and for fastening ProLine top accessories to the frame. Lifting eyes thread into corner blocks in a frame. Furnished in sets of four with plated finish.

| Item number | Description |
|---|---|
| PLEM12 | (4) Lifting Eyes |

## LIFTING ANGLES



Used to provide best load distribution while lifting enclosures with up to 450 kg of equipment and cabling in each bay. Angles mount to top of enclosure frame corner blocks and do not require removal of top cover for installation. Kit consists of two angles and four bolts and washers. Angles are clear zinc-coated 7,0 mm steel.

| Item number | Description |
|---|---|
| PJLBFB | Front-to-back lifting angles |
| PJLBSS | Side-to-side lifting angles |

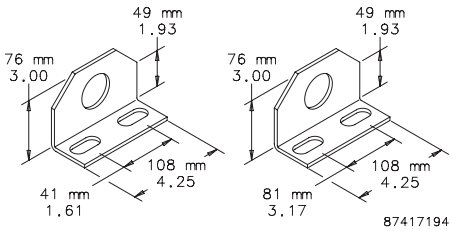


Lifting Eyes and Lifting Angles are designed for overhead lifting in conjunction with shackles and a spreader bar. Use of shackles instead of hooks is preferred. The angle between the top of the enclosure and the cable or chain must be at least 45 degrees. Use only slings and spreader bars that are designed for the specific application and are in compliance with regulations established by OSHA, ASME, ISA, ASTM and other governing agencies.

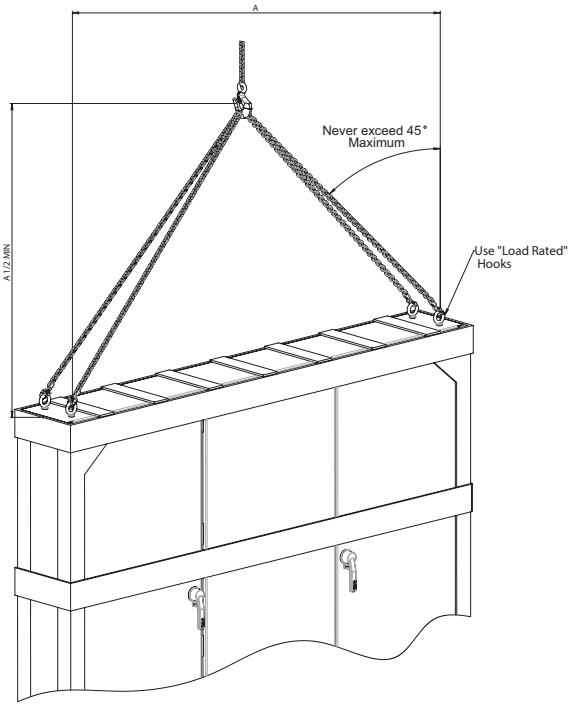


Our powerful portfolio of brands:
CADDY ERICO HOFFMAN RAYCHEM SCHROFF TRACER

©2019 nVent. All nVent marks and logos are owned or licensed by nVent Services GmbH or its affiliates. All other trademarks are the property of their respective owners.
nVent reserves the right to change specifications without notice.