STANDARD RECEIVER



R150Sc-A

Our standard diesel fuel receiver (shutoff option 9) is made from solid steel and is nickel-plated to ensure a long service life. Designed to accommodate flow rates up to 800 LPM (211 GPM), Fast Fill Systems fuel receivers are completely compatible with all major manufacturers' diesel fuel nozzles. Other available shutoff options: 7, 11, 12 and 13 PSI. Receivers come with a plastic cap for contaminant and spill protection.

Variations
R150Sc-J For remote mount for pressureless applications
R150Ac-A All aluminum construction

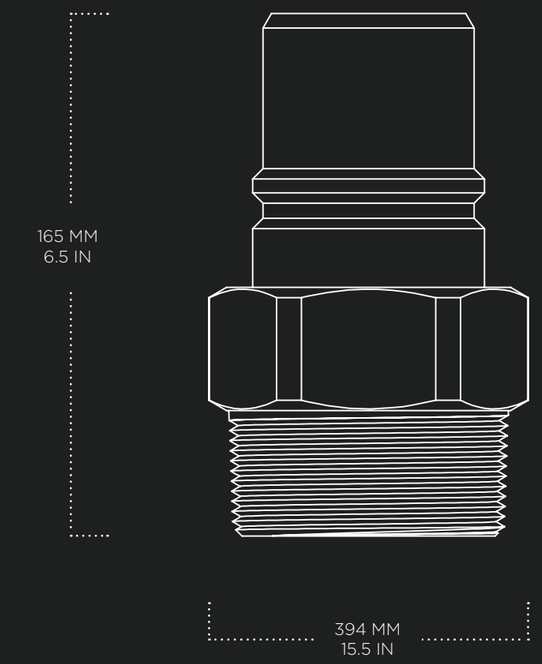

Max Operating Pressure	Installation Threads	Construction	Durability	Customizable	Compatibility
8.6 BAR 125 PSI	2" NPT	Nickel plated steel	Steel surface outlasts aluminum	Custom shut off pressures available	Compatible with all major fuel nozzle manufacturers