

CB-125A Moulded Case Circuit Breaker

1. Main functions

Overload protection, short-circuit protection, isolation function

2. Standard

IEC/EN 60947-2

3. Certification

CB, CE, TUV, REACH

4. Selection Example

CB	—	125A	1P	125A	8In	DC60V
CB Series		Design No	Poles 1P/2P/3P/4P	Rated current (A) 63~125A	Release characteristic 8In(Curve C) 12In(Curve D)	Default: AC type DC: AC&DC type DC60V(1P) DC125V(2P)

5. Overall and mounting dimensions (mm)

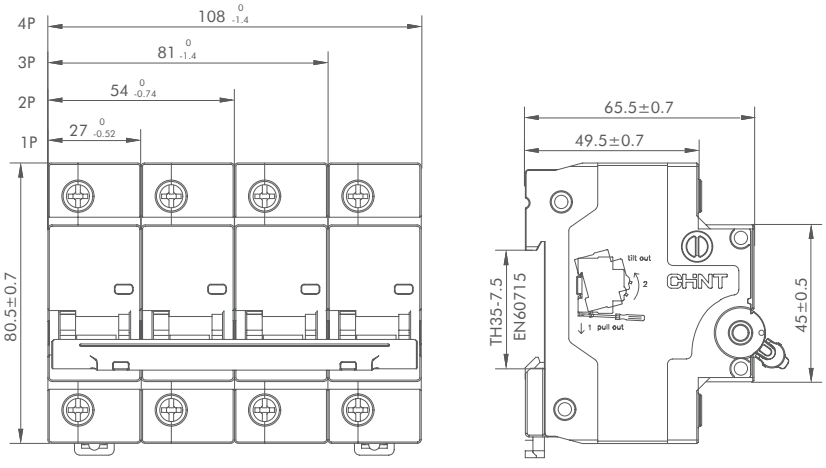

6. Technical data

Product Model		**CB-125A**
Rated current In (A)		63, 80, 100, 125
Rated operation voltage Ue (V)		AC: 50/60Hz,220/230/240 (1P) 380/400/415 (2P, 3P, 4P) DC: 60/110 (1P), 125/220 (2P)
Poles		1P, 2P, 3P, 4P
Mechanical life (cycles)		8500 (In≤100A);7000(In>100A)
Electrical life (cycles)		1500(In≤100A), 1000(In>100A)
Breaking Capacity Icu (A)		AC:10000 DC: 10000 (1P 110V, 2P 220V), 20000 (1P 60V, 2P 125V)
Breaking Capacity Ics (A)		AC :7500 DC: 7500 (1P 110V, 2P 220V), 15000 (1P 60V, 2P 125V)
Rated insulation voltage Ui (V)		500
Rated impulse withstand voltage Uimp (kV)		4
Power-frequency withstand voltage(V)		1890
Terminals	Minimum cross section (mm ^{2})	16
	Maximum cross section (mm ^{2})	50
	Standard connection torque (N · m)	3.5
	Wire insertion depth (mm)	15
Operating Temperature (℃)		-35～+70
Applicable altitude (m)		≤ 2000
Thermo-magnetic release characteristic		Ii=8In(1±20%), Ii=12In(1±20%)
Power consumption perpole (W)	63A	6
	80A	10
	100A	12
	125A	14
Cable entry		Top or bottom entry
Mounting		TH35-7.5-rail mounting
Protection degree	Direct Installation	IP20
	Mounted in the distribution box	IP40
Assemblable accessories		AX-X3, AL-X3, SHT-X3, OVT-X3, UVT-X3, OUVT-X3
Whether the salt mist test (SMT) is satisfied		No
Weight(kg)		0.16/per pole

Poles	Rated current (A)	Release characteristic	Description	Code
1P	63	8In(Curve C)	CB-125A 1P 63A 8In DC60V	537610
1P	63	8In(Curve C)	CB-125A 1P 63A 8In DC110V	537618
1P	63	12In(Curve D)	CB-125A 1P 63A 12In DC60V	537614
1P	63	12In(Curve D)	CB-125A 1P 63A 12In DC110V	537622
1P	80	8In(Curve C)	CB-125A 1P 80A 8In DC60V	537611
1P	80	8In(Curve C)	CB-125A 1P 80A 8In DC110V	537619
1P	80	12In(Curve D)	CB-125A 1P 80A 12In DC60V	537615
1P	80	12In(Curve D)	CB-125A 1P 80A 12In DC110V	537623
1P	100	8In(Curve C)	CB-125A 1P 100A 8In DC60V	537608
1P	100	8In(Curve C)	CB-125A 1P 100A 8In DC110V	537616
1P	100	12In(Curve D)	CB-125A 1P 100A 12In DC60V	537612
1P	100	12In(Curve D)	CB-125A 1P 100A 12In DC110V	537620
1P	125	8In(Curve C)	CB-125A 1P 125A 8In DC60V	537609
1P	125	8In(Curve C)	CB-125A 1P 125A 8In DC110V	537617
1P	125	12In(Curve D)	CB-125A 1P 125A 12In DC60V	537613
1P	125	12In(Curve D)	CB-125A 1P 125A 12In DC110V	537621
2P	63	8In(Curve C)	CB-125A 2P 63A 8In DC220V	537634
2P	63	8In(Curve C)	CB-125A 2P 63A 8In DC125V	537626
2P	63	12In(Curve D)	CB-125A 2P 63A 12In DC220V	537638
2P	63	12In(Curve D)	CB-125A 2P 63A 12In DC125V	537630
2P	80	8In(Curve C)	CB-125A 2P 80A 8In DC220V	537635
2P	80	8In(Curve C)	CB-125A 2P 80A 8In DC125V	537627
2P	80	12In(Curve D)	CB-125A 2P 80A 12In DC220V	537639
2P	80	12In(Curve D)	CB-125A 2P 80A 12In DC125V	537631
2P	100	8In(Curve C)	CB-125A 2P 100A 8In DC220V	537632
2P	100	8In(Curve C)	CB-125A 2P 100A 8In DC125V	537624
2P	100	12In(Curve D)	CB-125A 2P 100A 12In DC220V	537636
2P	100	12In(Curve D)	CB-125A 2P 100A 12In DC125V	537628
2P	125	8In(Curve C)	CB-125A 2P 125A 8In DC220V	537633
2P	125	8In(Curve C)	CB-125A 2P 125A 8In DC125V	537625
2P	125	12In(Curve D)	CB-125A 2P 125A 12In DC220V	537637
2P	125	12In(Curve D)	CB-125A 2P 125A 12In DC125V	537629
3P	63	8In(Curve C)	CB-125A 3P 63A 8In	537642
3P	63	12In(Curve D)	CB-125A 3P 63A 12In	537646
3P	80	8In(Curve C)	CB-125A 3P 80A 8In	537643
3P	80	12In(Curve D)	CB-125A 3P 80A 12In	537647
3P	100	8In(Curve C)	CB-125A 3P 100A 8In	537640
3P	100	12In(Curve D)	CB-125A 3P 100A 12In	537644
3P	125	8In(Curve C)	CB-125A 3P 125A 8In	537641
3P	125	12In(Curve D)	CB-125A 3P 125A 12In	537645
4P	63	8In(Curve C)	CB-125A 4P 63A 8In	537650
4P	63	12In(Curve D)	CB-125A 4P 63A 12In	537654
4P	80	8In(Curve C)	CB-125A 4P 80A 8In	537651
4P	80	12In(Curve D)	CB-125A 4P 80A 12In	537655
4P	100	8In(Curve C)	CB-125A 4P 100A 8In	537648
4P	100	12In(Curve D)	CB-125A 4P 100A 12In	537652
4P	125	8In(Curve C)	CB-125A 4P 125A 8In	537649
4P	125	12In(Curve D)	CB-125A 4P 125A 12In	537653