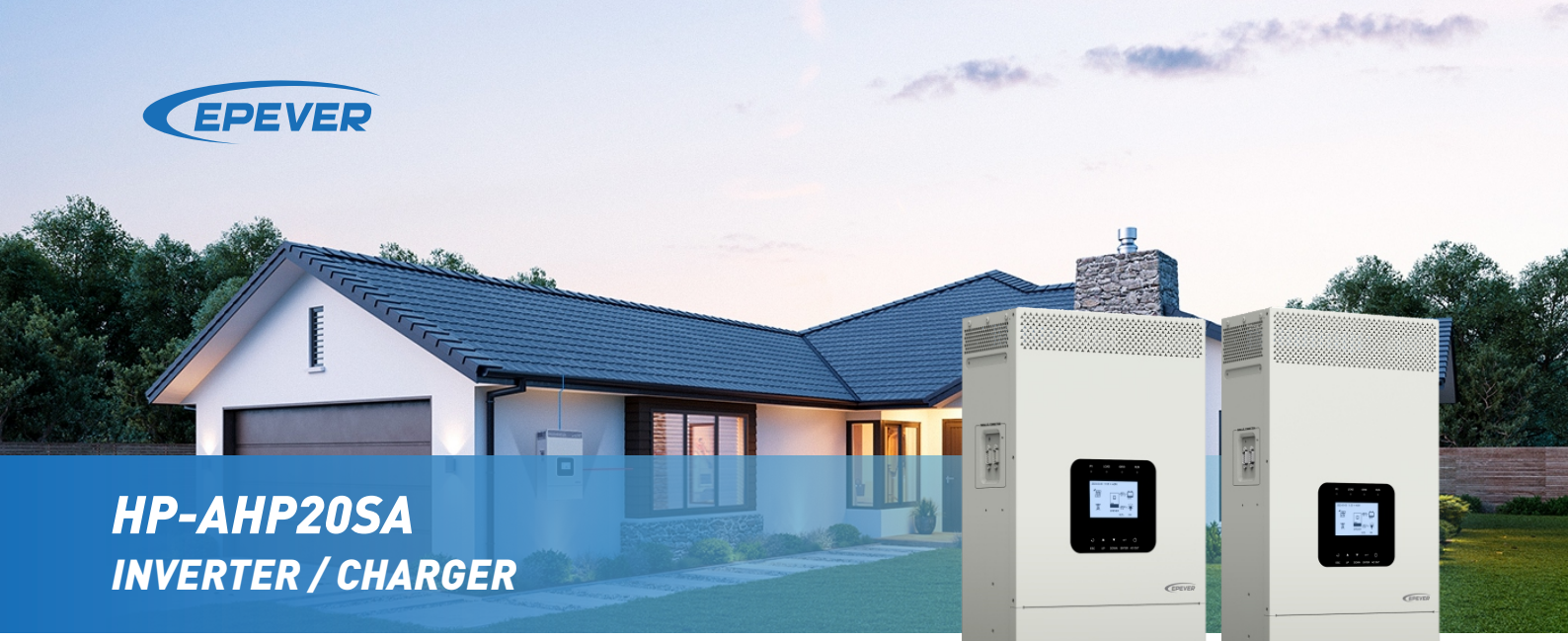

# HP-AHP20SA
## INVERTER / CHARGER

## Overview

The HP-AHP20SA series is a cost-effective product. It supports utility, oil engine and solar charging options. As well as for utility bypass, inverter output, and energy management. Advanced DSP chip with its control algorithm ensures high response speed, reliability, and conversion efficiency. Customers can achieve efficient energy utilization by flexibly using solar energy or utility power via customized settings. This high-quality product ensures stable power supply and is suitable for hybrid power generation systems that combine solar, utility, and oil engine. It can meet the application requirements of customers in building cost-effective residential power supply systems.

## Features

- Pure sine wave output.
- Supports battery or non-battery mode.
- Lithium battery communication port to perform the safe charging and discharging.
- Lithium battery self-activation.
- PFC technology reduces the demand on the power grid capacity.
- Advanced MPPT technology, with Max. tracking efficiency higher than 99.5%.
- HP5542-AH1050P65 supports two PV inputs to Improve PV utilization.
- Supports charging from multiple types of generators.
- Battery charging or discharging current limit to compatible with different types of batteries.
- Max utility charging current settings to flexibly configure utility charging power.
- One-button control of AC output.
- Large size LCD display for better status monitoring.
- RS485 communication interface with optional 4G or Wi-Fi modules for remote monitoring.
- Built-in Bluetooth to adjust settings through EPEVER APP.
- Comprehensive electronic protections.
- -20℃~+50℃ operating temperature range to meets more environment requirements.

## Appearance

**HP3542-AH0650P20SA**

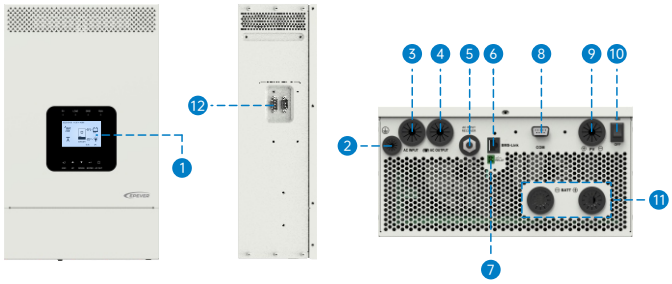


**HP5542-AH1050P20SA**

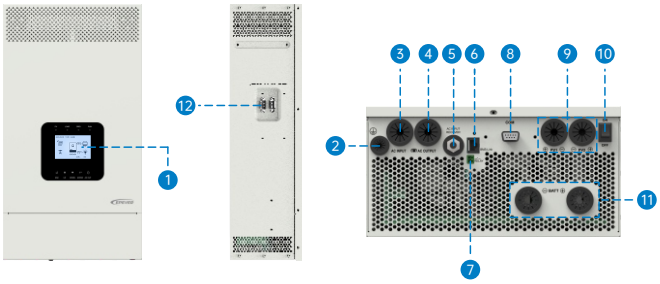


1. LCD
2. Grounding terminal
3. AC input port
4. AC output port
5. Utility overcurrent protector
6. BMS-Link port (RJ45, with isolation design) 5VDC/200mA
7. Dry contact interface
8. RS485 interface (DB9, with isolation design) 12VDC/200mA
9. PV terminals
10. Power switch
11. Battery terminals
12. Parallel connection interface (Reserved)

# Connection diagram

## Battery mode

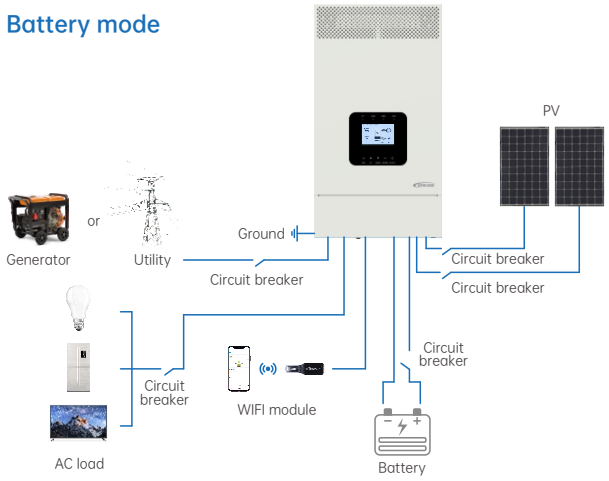


## No battery mode

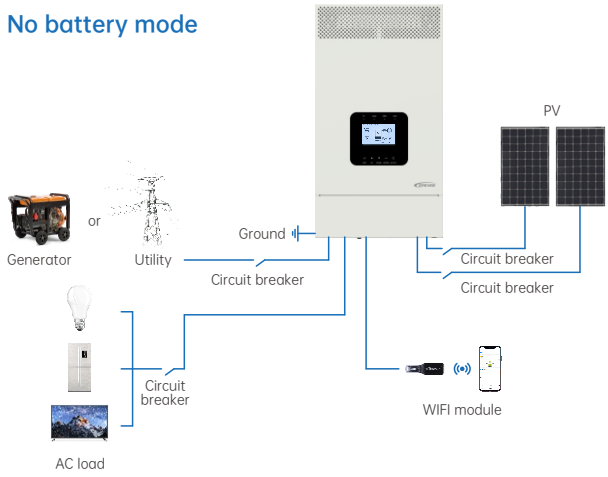


# Specifications

| Model | | HP3542-AH0650P20SA | HP5542-AH1050P20SA |
|---|---|---|---|
| Utility input | Utility Voltage | 176VAC~264VAC (Default), 90VAC~280VAC (Configurable) | |
| | Utility Frequency | 45Hz~65Hz | |
| | Maximum Utility Charging Current | 60A | 100A |
| | Switch Response Time | Switch Response Time – Inverter to Utility: 10ms<br>Switch Response Time – Utility to Inverter<br>(when the load power is higher than 100W): 20ms | |
| Inverter output | Inverter Rated Power (@30℃) | 3500W | 5500W |
| | 3-second Transient Surge Output Power | 7000W | 8500W |
| | Inverter Output Voltage | 220/230VAC±3% | |
| | Inverter Frequency | 50/60Hz±0.2% | |
| | Output Voltage Waveform | Pure sine wave | |
| | Load Power Factor | 0.2~1(VA ⩽ Rated output power) | |
| | Output Voltage Harmonic Distortion Rate | ⩽3% (48V resistive load) | |
| | Maximum Load Efficiency | 92% | 91% |
| | Maximum Inverter Efficiency | 94% | 94% |
| Solar controller | PV Maximum Open-circuit Voltage | 500V (At minimum operating environment temperature) 440V (At 25℃) | |
| | MPPT Voltage Range | 85~400V | |
| | PV Maximum Input Power | 4000W | 6000W |
| | PV Maximum Charging Current | 60A | 100A |
| | MPPT Maximum efficiency | ⩾99.5% | |
| Battery | Battery Rated Voltage | 48VDC | |
| | Battery Work Voltage Range | 43.2VDC~60VDC | |
| | Battery Maximum Charging Current | 60A | 100A |
| | Temperature Compensation | -3mV/℃/2V (Default) | |
| Others | No-load Losses | <0.6A | <1.0 A |
| | | Test condition: No PV and utility, AC out is on, fan stops@48V input | |
| | Standby Current | <0.15A | |
| | | Test condition: No PV and utility, AC out is off, fan stops@48V input) | |
| | Work Temperature Range | -20℃~+50℃<br>(When the environment temperature exceeds 30℃, the actual output power is reduced appropriately) | |
| | Storage Temperature Range | -25℃~+60℃ | |
| | Enclosure | IP20 | |
| | Relative Humidity | < 95% (N.C.) | |
| | Altitude | <4000M<br>(If the altitude exceeds 1000 meters, the actual output power is reduced appropriately) | |
| Mechanical parameters | Dimension (Length x Width x Height) | 534mm × 288mm × 163mm | 590mm × 288mm × 163mm |
| | Mounting size (Length x Width) | 512mm x 245mm | 568mm x 245mm |
| | Mounting hole size | Φ9mm/Φ10mm | Φ9mm/Φ10mm |


BEIJING EPSOLAR TECHNOLOGY CO., LTD.
+86-10-82894112
HUIZHOU EPEVER TECHNOLOGY CO., LTD.
+86-752-3889706
BEIJING EPSOLAR TECHNOLOGY CO., LTD. SHENZHEN BRANCH
+86-10-82894112