PHILIPS

Lighting



HF-Regulator II for TL5 lamps

HF-R 249 TL5 EII 220-240V 50/60Hz

High-frequency electronic dimming ballast, using the analog protocol (1-10 V) for TL5 HE/HO and TL5 Eco lamps. The ballast is primarily designed for Indoor application. For outdoor application, the luminaire should be minimum Classland need to be sufficiently protected against water & dust. The installation should also be guard against any lightening surge or any other necessary electrical protection as deemed in such typical installation & application.

Product data

Operating and Electrical	
Input Voltage	220 to 240 V
Line Frequency	50 to 60 Hz
Input Frequency	50 to 60 Hz
Earth Leakage Current (Max)	0.5 mA
Inrush Current Width	0.40 ms
Inrush Current Peak (Max)	45 A
Number of Products on MCB (16A Type B) (Nom)	12

Wiring	
Connector Type Input Terminals	WAGO 251 universal connector [Suitable for both automatic wiring (ALF and ADS) and manual wiring]
Connector Type Output Terminals	WAGO 251 universal connector [Suitable for both automatic wiring (ALF and ADS) and manual wiring]

Temperature	
Ambient temperature range	10 °C to 50 °C

Controls and Dimming	
Control Interface	1-10V

Mechanical and Housing	
Housing	L 360x30x21

Approval and Application	
Ingress protection code	IP20 [Finger-protected]
Energy Efficiency Index	A1 BAT
Safety Standard	IEC 61347-2-3
Environmental Standard	ISO 14001
Approval Marks	CE marking ENEC certificate VDE-EMV certificate

Product Data	
Order product name	HF-R 249 TL5 EII 220-240V 50/60Hz

HF-Regulator II for TL5 lamps

Full product name	HF-R 249 TL5 EII 220-240V 50/60Hz
Full product code	871150091003530
Order code	913700608766
Material Nr. (12NC)	913700608766
Numerator - Quantity Per Pack	1

EAN/UPC - Product/Case	8711500910035
Numerator - Packs per outer box	12
EAN/UPC - Case	8711500910042

Dimensional drawing

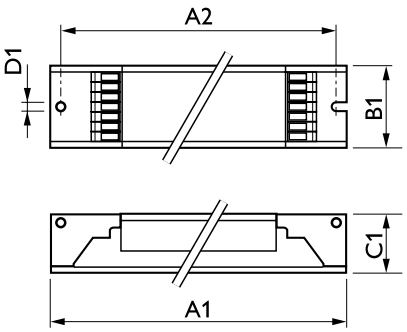

Product	D1	C1	A1	A2	B1
HF-R 249 TL5 EII 220-240V 50/60Hz	4.2 mm	22 mm	360 mm	350 mm	30 mm

© 2023 Signify Holding All rights reserved. Signify does not give any representation or warranty as to the accuracy or completeness of the information included herein and shall not be liable for any action in reliance thereon. The information presented in this document is not intended as any commercial offer and does not form part of any quotation or contract, unless otherwise agreed by Signify. Philips and the Philips Shield Emblem are registered trademarks of Koninklijke Philips N.V.