PRODUCT DATASHEET
SMART+ MATTER Floodlight 10W Multicolour

SMART+ MATTER Floodlights | Floodlights with MATTER technology

Areas of application

- Building facades

Product benefits

- Easy and quick installation
- Colorful garden lighting with smart and intelligent control options
- Combines the functionality of general lighting and mood lighting

Product features

- Controllable via voice control available: Google Assistant or Amazon Alexa
- RGB color control, approx. 16 million color options adjustable
- Dimmable
- Color temperature: 3,000 K (Warm White)
- Mounting bracket for up to 180° tilting
- Type of protection: IP65
- Connection via 0.5 m cable, wiring required
- Controllable via SMART+ App (with minimum Android 8.0 or iOS 14.0) or any other Matter-compatible platforms
- Network protocol: Matter over WiFi (2.4 GHz)

© 2026, LEDVANCE GmbH. All rights reserved.

TECHNICAL DATA

Electrical data

Nominal wattage	10.00 W
Nominal voltage	220…240 V
Mains frequency	50…60 Hz
Nominal current	45 mA
Inrush current	15 A
Inrush current time T_{h50}	200 µs
Max. number of luminaires per miniature circuit breaker B16	22
Max. number of luminaires per miniature circuit breaker C16	32
Power factor λ	0.90
Total harmonic distortion	< 20 %
Protection class	I
Operating mode	Mains voltage

Photometrical data

Luminous flux	800 lm
Total luminous flux of contained light sources	900 lm
Luminous efficacy	80 lm/W
Color temperature	3000 K
Light color (designation)	RGBW
Color rendering index Ra	> 80
Standard deviation of color matching	< 6 sdcm
Luminous intensity	340 cd
Photobiological safety group acc. to EN62778	RG1
Beam angle	100 °

Dimensions & Weight

Length	129.00 mm
Width	27.00 mm
Height	153.00 mm
Product weight	380.00 g

© 2026, LEDVANCE GmbH. All rights reserved.

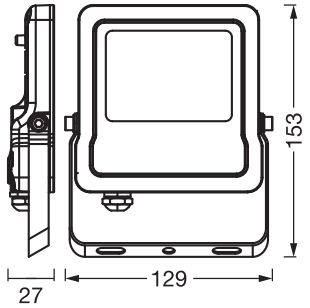

SMART WIFI MAT FLOOD
20W RGBW OSRAM

Materials & Colors

Product color	Dark grey
Housing color	Dark grey
Body material	Aluminum
Cover material	Glass
Glow Wire Test according to IEC 60695-2-12	650 °C
Mercury content	0.0 mg

Application & Mounting

Ambient temperature range	-20…+40 °C
Temperature range at storage	-20…+85 °C
Type of connection	Cable, 3-pole
Type of protection	IP65
Protection class IK (shock resistance)	IK05
Dimmable	No
Mounting type	Surface
Mounting location	Wall
Mounting height	<5 m
With light source	Yes

Lifespan

Lifespan L70/B50 at 25 °C	30000 h
Number of switching cycles	15000

© 2026, LEDVANCE GmbH. All rights reserved.

Emergency lighting

Type of emergency operation test	None

Certificates & Standards

Standards	CE / UKCA
Luminaire with limited surface temperature, "D sign"	No
Replaceable light source (EPREL)	Not replaceable

Additional product data

Product remark	Reset settings to default by switching the product on for three seconds and off for three seconds and repeating this five times.

EQUIPMENT / ACCESSORIES

- Mounting bracket included
- Mounting screws and dowels included
- Control via app or voice control requires compatible Smart home system
- For control via SMART+ App, a smartphone or tablet is required (with minimum Android 8.0 or iOS 14.0)

Safety advice

- All electrical connections must be made by a qualified person.
- Caution, risk of electric shock.
- Product in protection class I. All electrically conductive, metallic housing parts that can absorb voltage during operation or during maintenance in the event of a fault must be continuously connected to the protective earthing conductor.
- To reduce the risk of strangulation the flexible wiring connected to this luminaire shall be effectively fixed to the wall if the wiring is within arm's reach.

DOWNLOAD DATA

	Documents and certificates	Document name
PDF	User instruction / safety instructions	UI - SMART WIFI MAT FLOOD OSRAM
PDF	Legal information	SMART WIFI MAT FLOOD
PDF	Legal information	SMART WIFI MAT FLOOD
PDF	Declarations of conformity	CE declaration SMART
PDF	Declarations of conformity UKCA	UKCA declaration SMART
PDF	EU Data Act	SMART MATTER Lamps Luminaires Plugs

© 2026, LEDVANCE GmbH. All rights reserved.

LOGISTICAL DATA

Product code	Packaging unit (Pieces/Unit)	Dimensions (length x width x height)	Gross weight	Volume
4099854739903	Folding box 1	154 mm x 40 mm x 166 mm	445.00 g	1.02 dm^3
4099854739910	Shipping box 12	327 mm x 257 mm x 190 mm	5748.00 g	15.97 dm^3

The mentioned product code describes the smallest quantity unit which can be ordered. One shipping unit can contain one or more single products. When placing an order, for the quantity please enter single or multiples of a shipping unit.

References / Links

- Further information and frequently asked questions (FAQs) at www.ledvance.com/en-int/home-lighting/services/faq

DISCLAIMER

Subject to change without notice. Errors and omission excepted. Always make sure to use the most recent release.

© 2026, LEDVANCE GmbH. All rights reserved.